NE 181st Street South Sidewalk Improvements
BID NO. 16-C1517
ADDENDUM NO. 1 TO THE CONTRACT DOCUMENTS

Date of Issue: March 23, 2016

Date of Bid Opening: March 29, 2016

The Bid Documents for the above-named project are modified as described below. Bidders shall take this addendum into consideration when preparing and submitting their bids.

Bidders shall attach this addendum to their copy of the Contract Documents and shall acknowledge receipt of this addendum in the space provided in the Proposal Form. Failure to do so may subject the bidder to disqualifications of his/her bid.

THE BID DOCUMENTS ARE MODIFIED AS FOLLOWS:

1. PROPOSAL:

1A. **REPLACE** PROPOSAL BID SCHEDULE A in its entirety with the Addendum #1 Proposal Bid Schedule A which is attached to this Addendum No. 1. Bid items in Schedule A have been re-numbered to accommodate the following changes:

Schedule A: Sidewalk Improvements

Bid Item A8 Saw Cutting– **Quantity** is revised from 2,120 to 2,220.

Bid Item A12 Crushed Surfacing Top Course – **Quantity** is revised from 150 to 160.

Bid Item A14 HMA for Approach Cl. ½" PG 64-22 – **Quantity** is revised from 40 to 42.

Delete the following bid item from Schedule A:

Bid Item A15 – Precast Concrete Barrier Type 2, 16 LF

Bid Item A20 Bank Run Gravel for Trench Backfill – **Quantity** is revised from 310 to 340.

Bid Item A46 Comcast Conduit 4 In. Diam. - Install – **Quantity** is revised from 1290 to 1330

Provided to Builders Exchange of WA, Inc. For usage Conditions Agreement see www.bxwa.com - Always Verify Scale

Bid Item A48 Frontier Conduit 4 In. Diam. - Install – **Quantity** is revised from 1,300 to 1350

Bid Item A53 PSE Conduit 4 In. Diam. - Install – **Quantity** is revised from 960 to 1,000

2. CONTRACT PLANS:

2A. Plan Drawing No. SP1, Sheet No. 4 of 31, is replaced by the sheet included with this Addendum.

2B. Plan Drawing No. PP1, Sheet No. 6 of 31, is replaced by the sheet included with this Addendum.

2C. Plan Drawing No. IL1, Sheet No. 13 of 31, is replaced by the sheet included with this Addendum.

2D. Plan Drawing No. IL2, Sheet No. 14 of 31, is replaced by the sheet included with this Addendum.

2E. Plan Drawing No. IL3, Sheet No. 15 of 31, is replaced by the sheet included with this Addendum.

2F. Plan Drawing No. IL4, Sheet No. 16 of 31, is replaced by the sheet included with this Addendum.

2G. Plan Drawing No. UT1, Sheet No. 17 of 31, is replaced by the sheet included with this Addendum.

2H. Plan Drawing No. UD1, Sheet No. 19 of 31, is replaced by the sheet included with this Addendum.

4. APPENDIX B:

4A. Site Improvements Permit for Safeway (Parcel #011410-0620) is **ADDED** to Appendix B Site Improvement Permits.

NOTE: A completed copy of the "Bid Proposal Sheet" form found in the Contract Documents acknowledging receipt of this Addendum, and any subsequent addenda, must be submitted with the Bid.

ALL OTHER REQUIREMENTS OF THE CONTRACT DOCUMENTS REMAIN IN EFFECT.

THE CITY OF KENMORE

_____

Kent Vaughan, P .E.

Provided to Builders Exchange of WA, Inc. For usage Conditions Agreement see www.bxwa.com - Always Verify Scale

ADDENDUM #1

BID PROPOSAL SHEET

NE 181st ST South Sidewalk Improvements Project

Bid No.: 16-C1517

Having carefully examined all documents enclosed herein, the undersigned proposes to perform all Work in strict compliance with all documents, for the amount set forth below.

Schedule A – Sidewalk Improvements

Work under this Schedule includes: constructing approximately 700 linear feet of sidewalk and appurtenances on NE 181st ST between 68th Ave NE and 73rd Ave NE in the City's downtown area.

	Item Of Work	Bid Quantity	Unit	Unit Prices	Amount
DIVISION 1 – General Requirements					
A1.	Unexpected Site Changes	1	EST	$15,000	$15,000
A2.	Construction Surveying	1	LS		
A3.	SPCC Plan	1	LS		
A4.	Mobilization	1	LS		
A5.	Project Temporary Traffic Control	1	LS		
A6.	Pedestrian Traffic Control	1	LS		
DIVISION 2 - Earthwork					
A7.	Clearing and Grubbing	0.10	AC		
A8.	Saw Cutting	2,220	LF		
A9.	Roadway Excavation Incl. Haul	50	CY		
A10.	Gravel Borrow Incl. Haul	200	TON		
A11.	Shoring or Extra Excavation Class B	1	LS		

COMPANY NAME_____

Provided to Builders Exchange of WA, Inc. For usage Conditions Agreement see www.bxwa.com - Always Verify Scale

ADDENDUM #1

BID PROPOSAL SHEET

NE 181st ST South Sidewalk Improvements Project

Bid No.: 16-C1517

Item No	Item Of Work	Bid Quantity	Unit	Unit Prices	Amount
DIVISION 4 - Bases					
A12.	Crushed Surfacing Top Course	160	TON		
DIVISION 5 – Surface Treatments and Pavements					
A13.	HMA for Pavement Repair Cl. ½" PG 64-22	160	TON		
A14.	HMA for Approach Cl. ½" PG 64-22	42	TON		
DIVISION 6 - Structures					
A15.	Modular Block Wall	970	SF		
DIVISION 7 – Drainage Structures, Storm Sewers, Sanitary Sewers, Water Mains, and Conduits					
A16.	Ductile Iron Storm sewer Pipe 12 In. Diam.	430	LF		
A17.	Catch Basin Type 1	3	EA		
A18.	Connection to Existing Storm Sewer	1	EA		
A19.	Bank Run Gravel for Trench Backfill	340	TON		
DIVISION 8 – Miscellaneous Construction					
A20.	Erosion/Water Pollution Control	1	EST	$5,000	$5,000
A21.	Inlet Protection	7	EA		
A22.	Silt Fence	580	LF		
A23.	PSIPE (Zelkova Serrata "Village Green"/Village Green Zelkova) 3" Cal.	11	EA		
A24.	Tree Grate	11	EA		

COMPANY NAME_____

Provided to Builders Exchange of WA, Inc. For usage Conditions Agreement see www.bxwa.com - Always Verify Scale

ADDENDUM #1

BID PROPOSAL SHEET

NE 181st ST South Sidewalk Improvements Project

Bid No.: 16-C1517

Item No.	Item Of Work	Bid Quantity	Unit	Unit Prices	Amount
A25.	Property Restoration	1	EST	$5,000	$5,000
A26.	Root Barrier 18 In.	176	LF		
A27.	Topsoil Type A	11	CY		
A28.	Irrigation System Complete	1	LS		
A29.	Extruded Cement Conc. Curb	15	LF		
A30.	Cement Conc. Vertical Curb and Gutter	700	LF		
A31.	Pedestrian Railing	250	LF		
A32.	Cement Conc. Driveway Entrance Type 2 – 6 In.	70	SY		
A33.	Cement Conc. Driveway Entrance Type 2 – 8 In.	34	SY		
A34.	Cement Conc. Sidewalk	620	SY		
A35.	Cement Conc. Sidewalk Thickened Edge	262	SY		
A36.	N.D.C.B.U. Mailbox	1	EST	$1,500	$1,500
A37.	Illumination System Complete	1	LS		
A38.	Permanent Signing	1	LS		
A39.	Paint Line	1,370	LF		
A40.	Painted Traffic Arrow	2	EA		
A41.	Painted Traffic Letter	4	EA		
A42.	Plastic Stop Line	10	LF		
A43.	Temporary Pavement Markings	685	LF		

COMPANY NAME_____

Provided to Builders Exchange of WA, Inc. For usage Conditions Agreement see www.bxwa.com - Always Verify Scale

ADDENDUM #1

BID PROPOSAL SHEET

NE 181st ST South Sidewalk Improvements Project

Bid No.: 16-C1517

Item No	Item Of Work	Bid Quantity	Unit	Unit Prices	Amount
A44.	Comcast Conduit 2 In. Diam. - Install	360	LF		
A45.	Comcast Conduit 4 In. Diam. - Install	1,330	LF		
A46.	Frontier Conduit 2 In. Diam. - Install	190	LF		
A47.	Frontier Conduit 4 In. Diam. - Install	1,350	LF		
A48.	PSE Conduit 2 In. Diam. - Install	130	LF		
A49.	PSE Conduit 3 In. Diam. - Install	210	LF		
A50.	PSE Conduit 3 In. Diam. – Furnish and Install	110	LF		
A51.	PSE Conduit 3 In. Diam. Riser – Furnish and Install	2	EA		
A52.	PSE Conduit 4 In. Diam. - Install	1,000	LF		
A53.	PSE 233LA Fiberglass Handhole - Install	1	EA		
A54.	PSE 575LA Precast Vault - Install	1	EA		
A55.	PSE 484LA Precast Vault - Install	1	EA		
A56.	Comcast 3642LA Precast Vault - Install	4	EA		
A57.	Frontier 2x3 Precast Vault - Install	2	EA		
A58.	Frontier 3x5 Precast Vault - Install	2	EA		
A59.	Adjust Utility Vault	1	EA		

TOTAL SCHEDULE A BID _____
(Figures)

COMPANY NAME_____

Provided to Builders Exchange of WA, Inc. For usage Conditions Agreement see www.bxwa.com - Always Verify Scale

ADDENDUM #1

NW 1/4 SECTION 12, TOWNSHIP 26 NORTH, RANGE 4 EAST, W.M.

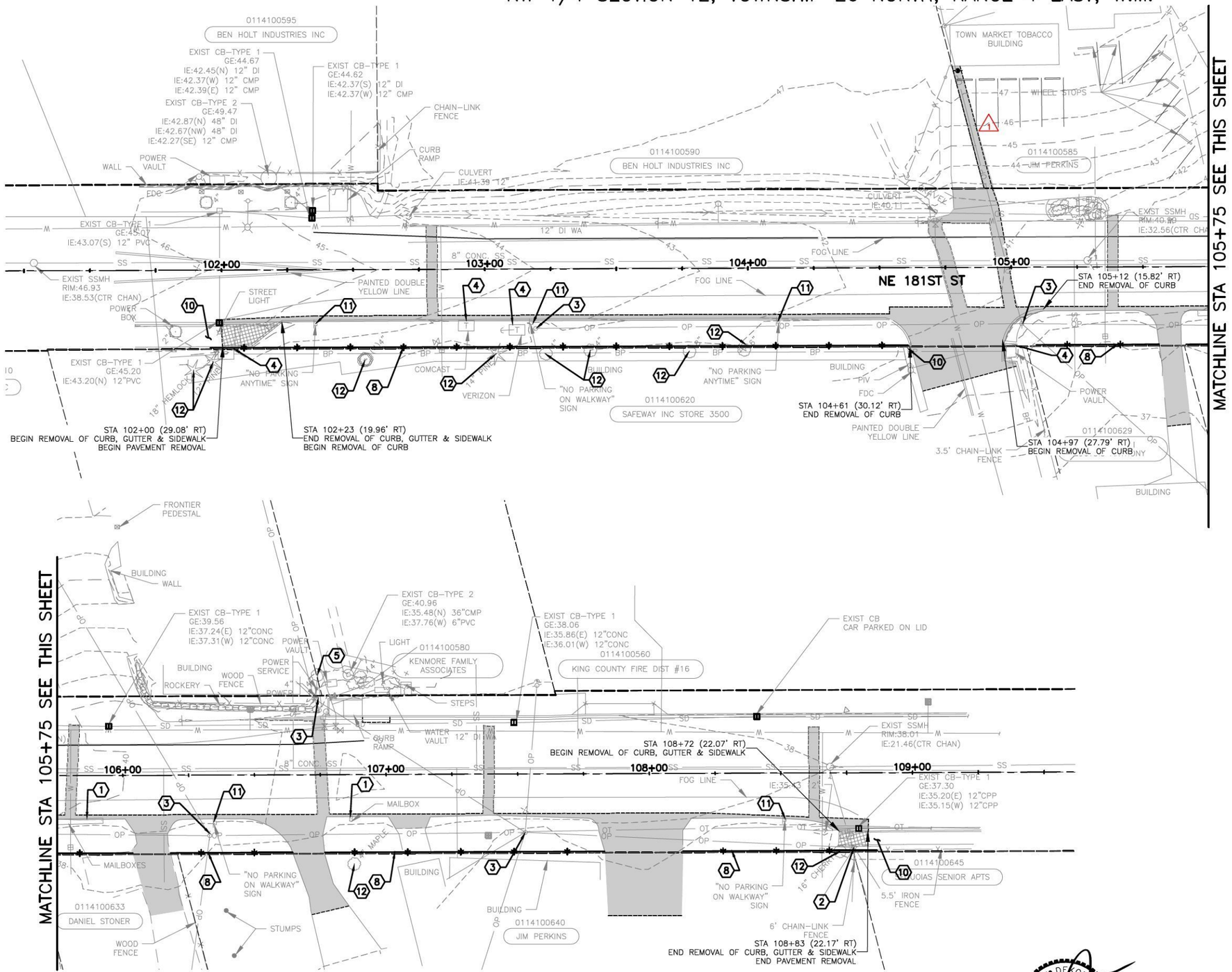

SCALE
20 0 20 40
FEET

CONSTRUCTION NOTES:

1. REMOVE EXISTING MAILBOX.
2. EXISTING UTILITY POLE TO REMAIN.
3. EXISTING UTILITY POLE TO BE REMOVED OR RELOCATED BY OTHERS.
4. PROTECT EXISTING UTILITY VAULT.
5. REMOVE EXISTING TREE (PAID FOR AS CLEARING AND GRUBBING)
6. NOT USED.
7. NOT USED.
8. INSTALL HIGH VISIBILITY SILT FENCE.
9. NOT USED.
10. PROTECT EXISTING SIDEWALK.
11. REMOVE SIGN.
12. PROTECT EXISTING TREE.

GENERAL NOTES:

1. THE CONTRACTOR IS RESPONSIBLE FOR PROVIDING SAFE TRAFFIC CONTROL, TEMPORARY CHANNELIZATION DEVICES AND FLAGGING DURING CONSTRUCTION.
2. AT MINIMUM, AT LEAST ONE LANE OF TRAFFIC MUST BE MAINTAINED AT ALL TIMES WITH APPROPRIATE FLAGGING IN PLACE.
3. THE CONTRACTOR IS RESPONSIBLE FOR COORDINATING DRIVEWAY ACCESS WITH RESIDENTS AND COMMERCIAL NEEDS.

LEGEND

- SAWCUT
- INSTALL INLET PROTECTION PER WSDOT STD. PLAN I–40.20–00
- REMOVE EXISTING PAVEMENT PER DETAIL DWG. NO. TS1.
- REMOVE EXISTING SIDEWALK, CURB & GUTTER
- HIGH VISIBILITY SILT FENCE

CALL 2 WORKING DAYS BEFORE YOU DIG
1 800 424–5555
UTILITIES UNDERGROUND LOCATION CENTER

No.	Date	Revision	DID By	DID Appr.
1	3/22/16	ADDENDUM #1		

Perteet
425-252-7700 I 1-800-615-9900
2707 Colby Avenue, Suite 900
Everett, Washington 98201

DOUGLAS DEE COEKOEK — 49442 — REGISTERED PROFESSIONAL ENGINEER

Drawn By MC	Date 03/08/16
Designed By CP	03/08/16
Checked By DD	03/08/16
Approved By	
Project Number	

CITY OF KENMORE

NE 181ST ST SOUTH SIDE SIDEWALK SITE PREPARATION & EROSION CONTROL

Drawing No. SP1
Sheet No. 4 of Total 31

Mar 22, 2016 - 12:45pm DDaKoekoek X:\Kenmore, City of\Projects\20120170 - Professional Services Contract 12-C1080-027 - Kenmore NE 181st St South Side Sidewalk\CADD\Plan Sheets\20120170 SP.dwg Layout Name: SP1

Provided to Builders Exchange of WA, Inc. For usage Conditions Agreement see www.bxwa.com - Always Verify Scale

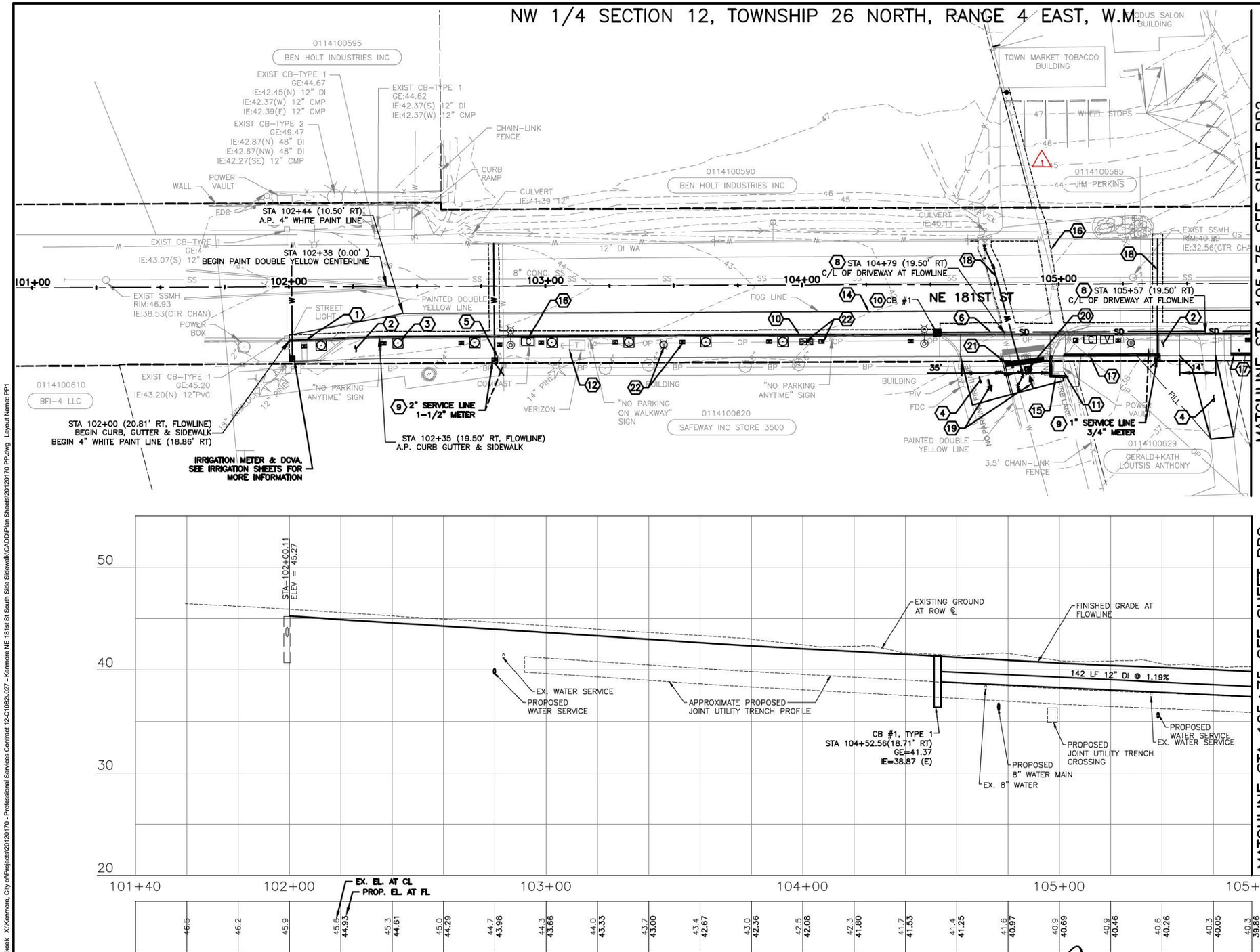

ADDENDUM #1

SCALE
20 0 20 40
FEET

CONSTRUCTION NOTES:

1. CONSTRUCT CEMENT CONC. VERTICAL CURB AND GUTTER, PER WSDOT STD. PLAN F-10.12-03.
2. CEMENT CONC. SIDEWALK, PER TS1.
3. INSTALL STREET TREE AND TREE GRATE TYP. SEE IRRIGATION & PLANTING PLAN (TYP).
4. CONSTRUCT DRIVEWAY APPROACH PER TS1.
5. ABANDON IN PLACE EXISTING IRRIGATION SYSTEM.
6. INSTALL DUCTILE IRON STORM SEWER PIPE, 12" DIAM.
7. INSTALL MAILBOX UNIT PER KCDCS FIG. 5-017.
8. CONSTRUCT CEMENT CONC. DRIVEWAY ENTRANCE TYPE 2 PER MD1.
9. REPLACE EXISTING WATER SERVICE WITH NEW, SIZE AS INDICATED. REMOVE AND DISPOSE OF EXISTING METER BOX AND CLOSE EXISTING CORPORATION STOP AT MAIN. RECONNECT EXISTING SERVICE LINE. SEE NUD STANDARD DETAILS AND SPECIFICATIONS. COORDINATE WITH NUD FOR METER REMOVAL AND REINSTALLATION.
10. INSTALL CATCH BASIN TYPE 1, PER KCDCS FIG. 7-003.
11. POWER VAULT TO BE ADJUSTED BY PSE.
12. ADJUST UTILITY VAULT TO GRADE.
13. CONNECT TO EXISTING DRAINAGE STRUCTURE.
14. INSTALL 4" WHITE PLASTIC LINE.
15. EXTRUDED CONC. CURB PER DETAIL SHEET MD1.
16. REFER TO UT SHEETS FOR UNDERGROUNDING PLANS AND DETAILS.
17. REFER TO SHEETS WP1 & WD1 FOR WALL PLANS AND DETAILS.
18. REFER TO SHEETS WA1 & WA2 FOR WATER PLAN & DETAILS.
19. INSTALL PAINTED TRAFFIC ARROW.
20. INSTALL PAINTED TRAFFIC LETTER(S) "STOP".
21. INSTALL PAINTED STOP LINE.
22. ILLUMINATION SYSTEM, SEE ILLUMINATION PLANS, TYP.
23. REMOVE EXISTING HYDRANT, CLOSE VALVE, REMOVE EXISTING HYDRANT, CAP HYDRANT LINE WITH RESTRAINED DI CAP AND THRUST BLOCK.
24. ~~FURNISH AND PLACE CONCRETE BARRIER TYPE 2 AROUND POLE AS DIRECTED BY THE ENGINEER.~~ 1

GENERAL NOTES:

1. ALL GRATING, ACCESS COVERS, JUNCTION BOXES, CABLE VAULTS, PULL BOXES AND OTHER APPURTENANCES WITHIN THE SIDEWALK MUST HAVE SLIP RESISTANT SURFACES, BE FLUSH WITH SURFACE AND MATCH GRADE, AND BE ORIENTED SQUARE TO CURB.
2. ALL WORK TO BE IN ACCORDANCE WITH THE WSDOT STANDARD PLANS, SPECIFICATIONS, AND ASSOCIATED SPECIAL PROVISIONS, UNLESS OTHER WISE NOTED.
3. THE CONTRACTOR IS RESPONSIBLE FOR SEQUENCING OF THE UTILITY REMOVALS.
4. ALL EXISTING UTILITIES SHALL BE VERIFIED BY THE CONTRACTOR PRIOR TO CONSTRUCTION OF THE STORM DRAINAGE SYSTEM.

No.	Date	Revision	By	Appr.
1	3/22/16	ADDENDUM #1	DID	DID

Perteet
425-252-7700 | 1-800-615-9900
2707 Colby Avenue, Suite 900
Everett, Washington 98201

DUSTIN DEE DAVENPORT STATE OF WASHINGTON 49442 REGISTERED PROFESSIONAL ENGINEER

Drawn By MC	Date 03/08/16
Designed By CP	03/08/16
Checked By DD	03/08/16
Approved By	
Project Number	

CITY OF KENMORE

NE 181ST ST SOUTH SIDE SIDEWALK

PLAN & PROFILE

Drawing No. PP1

Sheet No. 6 of Total 31

Mar 22, 2016 - 12:48pm DDeKoekkoek X:\Kenmore, City of\Projects\20120170 - Professional Services Contract 12-C10820.027 - Kenmore NE 181st St South Side Sidewalk\C4DD\Plan Sheets\20120170 PP.dwg Layout Name: PP1

Provided to Builders Exchange of WA, Inc. For usage Conditions Agreement see www.bxwa.com - Always Verify Scale

ADDENDUM #1

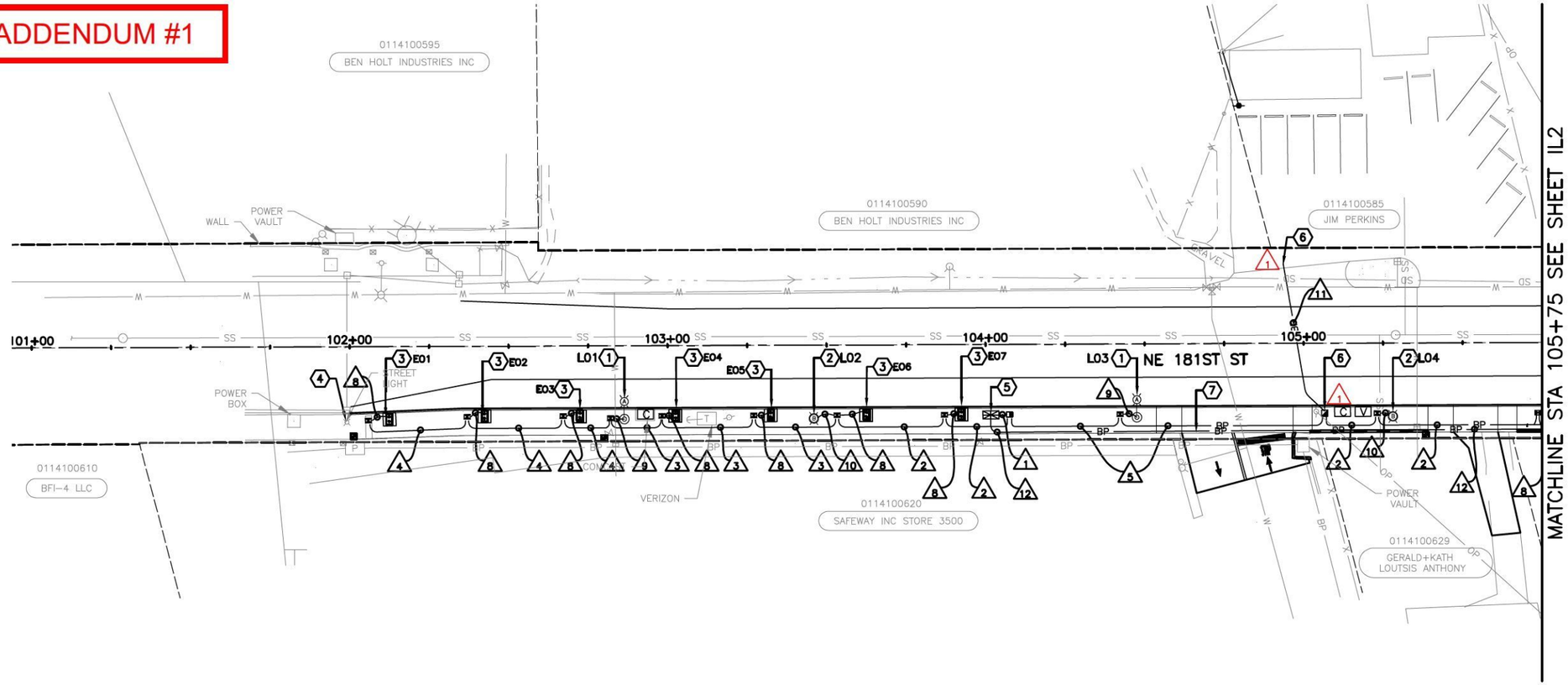

CONSTRUCTION NOTES:

1. CONSTRUCT TOP OF FOUNDATION FLUSH WITH SIDEWALK FINISHED GRADE AND INSTALL ROADWAY LUMINAIRE POLE, BRACKET ARM, AND FIXTURE PER LUMINIAIRE SCHEDULE. SEE DETAIL 1 ON IL3.
2. CONSTRUCT TOP OF FOUNDATION FLUSH WITH SIDEWALK FINISHED GRADE AND INSTALL PEDESTRIAN LUMINAIRE POLE AND FIXTURE PER LUMINAIRE SCHEDULE. SEE DETAIL 2 ON IL3.
3. INSTALL EXTERIOR OUTLET IN TREE PIT. DETAIL 4 ON IL3.
4. PROTECT EXISTING LUMINAIRE.
5. CONSTRUCT FOUNDATION AND INSTALL 200 AMP, 240V, SINGLE PHASE, TYPE ES-2EU SERVICE CABINET. SEE SHEET IL4 FOR CABINET DETAILS. COORDINATE WITH PSE FOR POWER CONNECTION. CABINET PLACEMENT SHALL BE SO THAT IT LINES UP WITH TREE PITS, KEEP OUT OF PEDESTRIAN ACCESS ROUTE. LOCATION TO BE FIELD VERIFIED BY ENGINEER.
6. INSTALL TYPE 2 JUNCTION BOX. ROUTE 2-2" CONDUITS ACROSS NE 181ST STREET WITHIN JUT AND CAP.
7. CONTRACTOR TO COORDINATE ELECTRICAL SERVICE CABINET CONNECTION TO PSE VAULT.
8. STUB-OUT AND CAP ONE 2-INCH CONDUIT HEADING EAST FOR FUTURE USE.

LEGEND

- ROADWAY LUMINAIRE
- PEDESTRIAN LUMINAIRE
- OUTLET IN TREE PIT
- TYPE 1 JUNCTION BOX
- TYPE 2 JUNCTION BOX
- SERVICE CABINET
- ILLUMINATION CONDUIT

GENERAL NOTES

1. ALL WORK AND MATERIALS SHALL BE IN ACCORDANCE WITH THE NATIONAL ELECTRICAL CODE AND THE 2014 EDITION OF THE WSDOT STANDARD SPECIFICATIONS FOR ROAD, BRIDGE, AND MUNICIPAL CONSTRUCTION.
2. CONTRACTOR SHALL BE RESPONSIBLE FOR LOCATING AND PROTECTING ALL EXISTING UTILITIES PRIOR TO BEGINNING CONSTRUCTION. LOCATION OF UTILITIES SHOWN ON PLANS ARE BASED ON BEST RECORDS AVAILABLE AND ARE SUBJECT TO VARIATION. CALL 1-800-424-5555 FOR ASSISTANCE IN UTILITY LOCATION.
3. ALL NEW CONDUIT SHALL BE SCHEDULE 40 PVC AND SHALL BE PLACED IN THE SAME TRENCH WITH OTHER CONDUIT WHEN POSSIBLE. SEE UTILITY CONVERSION PLANS (UD SHEETS) FOR TRENCH LOCATIONS.
4. ALL LUMINAIRE POLES SHALL BE LOCATED A MINIMUM OF 3 FT. FROM FACE OF CURB TO CENTER OF LUMINAIRE POLE.
5. REFER TO SHEET IL3 FOR ONE-LINE DIAGRAM AND CIRCUITRY OF OUTLETS ON LUMINAIRE POLE AND EXTERIOR OUTLETS IN TREE PIT.
6. ALL TYPE 1 AND TYPE 2 JUNCTION BOXES SHALL BE PER WSDOT STD PLAN J-40.10-03. ALL JUNCTION BOXES LIDS SHALL BE LABELED "CITY LIGHT".
7. ILLUMINATION JUNCTION BOXES, PULL BOXES, AND CABLE VAULTS SHALL BE KEPT OUT OF THE PEDESTRIAN ACCESS ROUTE AND SHALL HAVE A SLIP RESISTANT SURFACE LID PER THE SPECIAL PROVISIONS. FINAL LOCATION SHALL BE APPROVED BY THE ENGINEER.
8. SEE UTILITY CONVERSION PLANS (UD SHEETS) FOR ADDITIONAL DETAILS.

WIRE SCHEDULE

NO.	CONDUIT SIZE	CONDUCTORS EXISTING	CONDUCTORS NEW	CIRCUIT	COMMENTS
1	2"		2#8	A	ROADWAY ILLUMINATION
			2#8	B	PEDESTRIAN ILLUMINATION
			2#8	F	OUTLETS SOUTH
			2#8	H	OUTLETS POLE
	2"				SPARE
2	2"		2#8	A	ROADWAY ILLUMINATION
			2#8	B	PEDESTRIAN ILLUMINATION
			2#8	F	OUTLETS SOUTH
			2#8	H	OUTLETS POLE
3	2"		2#8	A	ROADWAY ILLUMINATION
			2#8	F	OUTLETS SOUTH
			2#8	H	OUTLETS POLE
4	2"		2#8	F	OUTLETS SOUTH
5	2"		2#8	A	ROADWAY ILLUMINATION
			2#8	B	PEDESTRIAN ILLUMINATION
			2#8	F	OUTLETS SOUTH
			2#8	H	OUTLETS POLE

WIRE SCHEDULE

NO.	CONDUIT SIZE	CONDUCTORS EXISTING	CONDUCTORS NEW	CIRCUIT	COMMENTS
6	2"		2#8	A	ROADWAY ILLUMINATION
			2#8	F	OUTLETS SOUTH
7	2"				SPARE
8	1"		2#8	F	OUTLETS SOUTH
9	1"		2#8	A	ROADWAY ILLUMINATION
			2#8	H	OUTLETS POLE
10	1"		2#8	B	PEDESTRIAN ILLUMINATION
11	2"				SPARE
	2"				SPARE
12	3"	SEE CONSTRUCTION NOTE #7			

SCALE
20 0 20 40
FEET

LUMINAIRE SCHEDULE

POLE NO.	STATION	OFFSET	ARM LENGTH	MOUNTING HEIGHT	CIRCUIT	BASE TYPE	LUMINAIRE TYPE
L01	102+86.50	23.0' RT	2'	35'	A	SLIP	SEE LUMINAIRE SPECIFICATION TABLE ON IL2
L02	103+46.00	23.0' RT	N/A	14'	B	FIXED	SEE LUMINAIRE SPECIFICATION TABLE ON IL2
L03	104+47.50	23.0' RT	2'	35'	A	SLIP	SEE LUMINAIRE SPECIFICATION TABLE ON IL2
L04	105+28.00	23.0' RT	N/A	14'	B	FIXED	SEE LUMINAIRE SPECIFICATION TABLE ON IL2
L05	105+92.00	23.0' RT	2'	35'	A	SLIP	SEE LUMINAIRE SPECIFICATION TABLE ON IL2
L06	106+94.00	23.0' RT	N/A	14'	B	FIXED	SEE LUMINAIRE SPECIFICATION TABLE ON IL2
L07	107+76.00	23.0' RT	2'	35'	A	SLIP	SEE LUMINAIRE SPECIFICATION TABLE ON IL2
E01	SEE LANDSCAPE PLANS				F		EXTERIOR OUTLET
E02	SEE LANDSCAPE PLANS				F		EXTERIOR OUTLET
E03	SEE LANDSCAPE PLANS				F		EXTERIOR OUTLET
E04	SEE LANDSCAPE PLANS				F		EXTERIOR OUTLET
E05	SEE LANDSCAPE PLANS				F		EXTERIOR OUTLET
E06	SEE LANDSCAPE PLANS				F		EXTERIOR OUTLET
E07	SEE LANDSCAPE PLANS				F		EXTERIOR OUTLET
E08	SEE LANDSCAPE PLANS				F		EXTERIOR OUTLET
E09	SEE LANDSCAPE PLANS				F		EXTERIOR OUTLET
E10	SEE LANDSCAPE PLANS				F		EXTERIOR OUTLET
E11	SEE LANDSCAPE PLANS				F		EXTERIOR OUTLET

CALL 2 WORKING DAYS BEFORE YOU DIG
1 800 424-5555
UTILITIES UNDERGROUND LOCATION CENTER

No.	Date	Revision	By	Appr.
1	3/22/16	ADDENDUM #1	DID	DID

Perteet
425-252-7700 I 1-800-615-9900
2707 Colby Avenue, Suite 900
Everett, Washington 98201

Drawn By MC 03/08/16
Designed By MM 03/08/16
Checked By DD 03/08/16
Approved By
Date
Project Number

CITY OF KENMORE
NE 181ST ST SOUTH SIDE SIDEWALK
ILLUMINATION PLAN

Drawing No. IL1
Sheet No. 13 of Total 31

Mar 22, 2016 - 12:50pm DDaKoekkoek X:\Kenmore, City of\Projects\20120170 - Professional Services Contract 12-C1082L027 - Kenmore NE 181st St South Side Sidewalk\CADD\Plan Sheets\20120170 IL.dwg Layout Name: IL1

Provided to Builders Exchange of WA, Inc. For usage Conditions Agreement see www.bxwa.com - Always Verify Scale

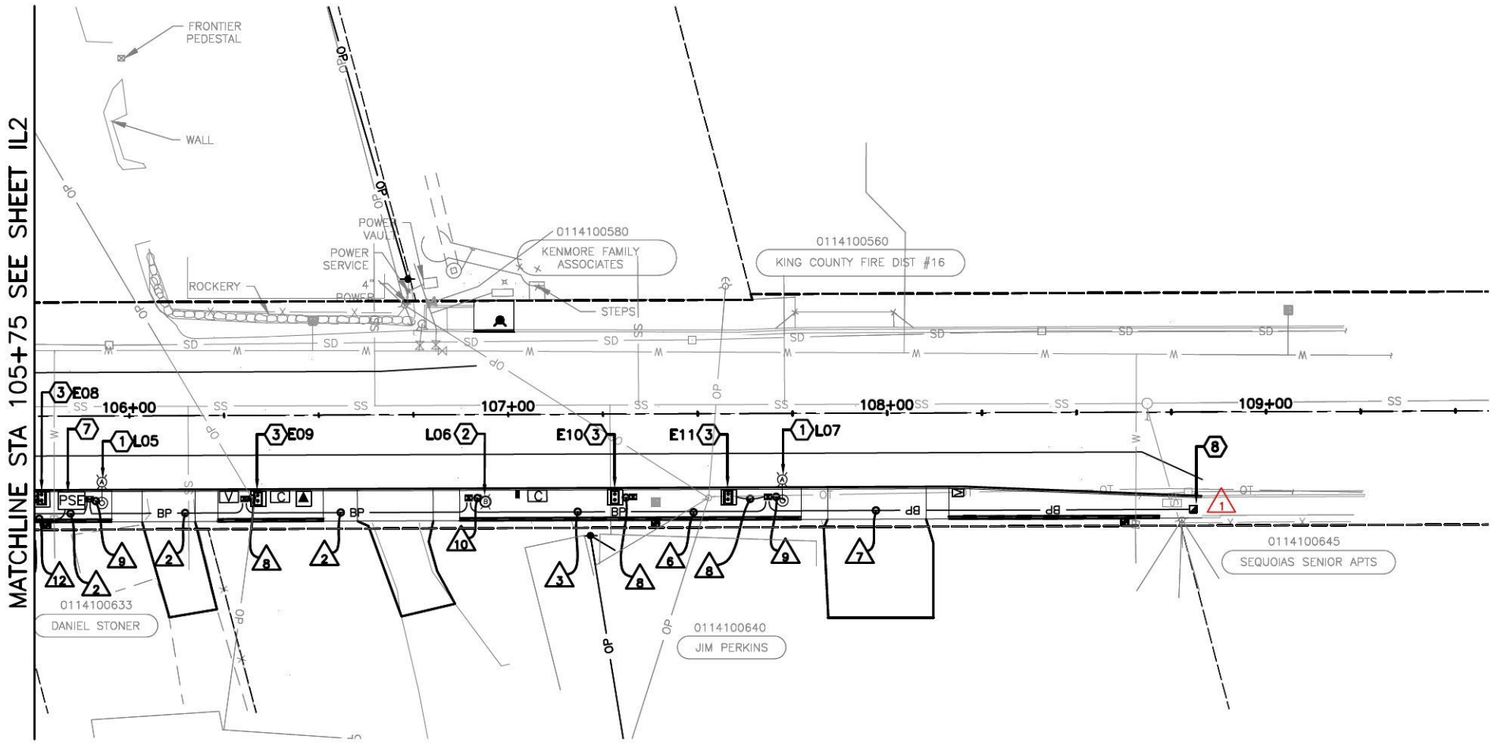

LEGEND

- ROADWAY LUMINAIRE
- PEDESTRIAN LUMINAIRE
- OUTLET IN TREE PIT
- TYPE 1 JUNCTION BOX
- TYPE 2 JUNCTION BOX
- SERVICE CABINET
- ILLUMINATION CONDUIT

SCALE
20 0 20 40
FEET

GENERAL NOTES

1. ALL WORK AND MATERIALS SHALL BE IN ACCORDANCE WITH THE NATIONAL ELECTRICAL CODE AND THE 2014 EDITION OF THE WSDOT STANDARD SPECIFICATIONS FOR ROAD, BRIDGE, AND MUNICIPAL CONSTRUCTION.
2. CONTRACTOR SHALL BE RESPONSIBLE FOR LOCATING AND PROTECTING ALL EXISTING UTILITIES PRIOR TO BEGINNING CONSTRUCTION. LOCATION OF UTILITIES SHOWN ON PLANS ARE BASED ON BEST RECORDS AVAILABLE AND ARE SUBJECT TO VARIATION. CALL 1-800-424-5555 FOR ASSISTANCE IN UTILITY LOCATION.
3. ALL NEW CONDUIT SHALL BE SCHEDULE 40 PVC AND SHALL BE PLACED IN THE SAME TRENCH WITH OTHER CONDUIT WHEN POSSIBLE. SEE UTILITY CONVERSION PLANS (UD SHEETS) FOR TRENCH LOCATIONS.
4. ALL LUMINAIRE POLES SHALL BE LOCATED A MINIMUM OF 3 FT. FROM FACE OF CURB TO CENTER OF LUMINAIRE POLE.
5. REFER TO SHEET IL3 FOR ONE-LINE DIAGRAM AND CIRCUITRY OF OUTLETS ON LUMINAIRE POLE AND EXTERIOR OUTLETS IN TREE PIT.
6. ALL TYPE 1 AND TYPE 2 JUNCTION BOXES SHALL BE PER WSDOT STD PLAN J-40.10-03. ALL JUNCTION BOXES LIDS SHALL BE LABELED "CITY LIGHT".
7. ILLUMINATION JUNCTION BOXES, PULL BOXES, AND CABLE VAULTS SHALL BE KEPT OUT OF THE PEDESTRIAN ACCESS ROUTE AND SHALL HAVE A SLIP RESISTANT SURFACE LID PER THE SPECIAL PROVISIONS. FINAL LOCATION SHALL BE APPROVED BY THE ENGINEER.
8. SEE UTILITY CONVERSION PLANS (UD SHEETS) FOR ADDITIONAL DETAILS.

CONSTRUCTION NOTES:

1. CONSTRUCT TOP OF FOUNDATION FLUSH WITH SIDEWALK FINISHED GRADE AND INSTALL ROADWAY LUMINAIRE POLE, BRACKET ARM, AND FIXTURE PER LUMINAIRE SCHEDULE. SEE DETAIL 1 ON IL3.
2. CONSTRUCT TOP OF FOUNDATION FLUSH WITH SIDEWALK FINISHED GRADE AND INSTALL PEDESTRIAN LUMINAIRE POLE AND FIXTURE PER LUMINAIRE SCHEDULE. SEE DETAIL 2 ON IL3.
3. INSTALL EXTERIOR OUTLET IN TREE PIT. DETAIL 4 ON IL3.
4. PROTECT EXISTING LUMINAIRE.
5. CONSTRUCT FOUNDATION AND INSTALL 200 AMP, 240V, SINGLE PHASE, TYPE ES-2EU SERVICE CABINET. SEE SHEET IL4 FOR CABINET DETAILS. COORDINATE WITH PSE FOR POWER CONNECTION. CABINET PLACEMENT SHALL BE SO THAT IT LINES UP WITH TREE PITS, KEEP OUT OF PEDESTRIAN ACCESS ROUTE. LOCATION TO BE FIELD VERIFIED BY ENGINEER.
6. INSTALL TYPE 2 JUNCTION BOX. ROUTE 2-2" CONDUITS ACROSS NE 181ST STREET WITHIN JUT AND CAP.
7. CONTRACTOR TO COORDINATE ELECTRICAL SERVICE CABINET CONNECTION TO PSE VAULT.
8. STUB-OUT AND CAP ONE 2-INCH CONDUIT HEADING EAST FOR FUTURE USE.

LUMINAIRE SPECIFICATION TABLE

FIXTURE						LUMINAIRE ARM		POLE		FINISH	TYPE OF BRACKET
TYPE	DESCRIPTION	MANUFACTURE CATALOG NUMBER	LAMP CONFIGURATION	NO. OF FIXTURES	TOTAL VOLTS PER FIXTURE	DESCRIPTION	MANUFACTURE CATALOG NUMBER	DESCRIPTION	MANUFACTURE CATALOG NUMBER		
A	LITHONIA AERIS DECORATIVE ROADWAY LED LUMINAIRE	AS1-LED-1-63B30/40K-SR-3-240	63 LEDS, 109 W, TYPE III	1	240	LITHONIA AERIS DECORATIVE CURVED ARM	DCASDDBXDU	VALMONT SQUARE STRAIGHT STEEL DECORATIVE ANCHOR BASE POLE (OR APPROVED EQUIVALENT)	6" SQ-STR-7GA-HH-FP/GV-SB	POWDER COATED DARK BRONZE	BANNER
B	SELUX QUADRO H2 LED DECORATIVE PEDESTRIAN LUMINAIRE	QH2L-R5-1-4LT500-30-BZ-208	58W, TYPE V FULL CUTOFF	1	240	N/A	N/A	VALMONT SQUARE STRAIGHT STEEL DECORATIVE ANCHOR BASE POLE (OR APPROVED EQUIVALENT)	4" SQ-STR-7GA-HH-FP/GV-FB	POWDER COATED DARK BRONZE	HANGING BASKET MOUNTS

ADDENDUM #1

No.	Date	Revision	By	Appr.
1	3/22/16	ADDENDUM #1	DID	DID

Perteet
425-252-7700 I 1-800-615-9900
2707 Colby Avenue, Suite 900
Everett, Washington 98201

KENMORE

MARIO ALBERTO MARTINEZ
STATE OF WASHINGTON
50475
REGISTERED
PROFESSIONAL ENGINEER
3/22/16

Drawn By	MC	Date 03/08/16
Designed By	MM	03/08/16
Checked By	DD	03/08/16
Approved By		

Project Number

CITY OF KENMORE
NE 181ST ST SOUTH SIDE SIDEWALK
ILLUMINATION PLAN

Drawing No. IL2
Sheet No. 14 of Total 31

Mar 22, 2016 - 12:52pm DDeKoekkoek X:\Kenmore, City of\Projects\20120170 - Professional Services Contract 12-C10820\027 - Kenmore NE 181st St South Side Sidewalk\CADD\Plan Sheets\20120170 IL.dwg Layout Name: IL2

Provided to Builders Exchange of WA, Inc. For usage Conditions Agreement see www.bxwa.com - Always Verify Scale

ADDENDUM #1

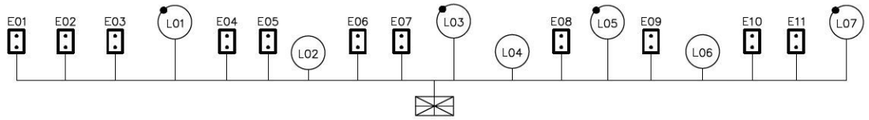

LEGEND:

- SERVICE CABINET
- # PEDESTRIAN LUMINAIRE W/O OUTLET
- # ROADWAY LUMINAIRE WITH OUTLET
- OUTLET FIXTURE

ONE-LINE DIAGRAM
N.T.S.

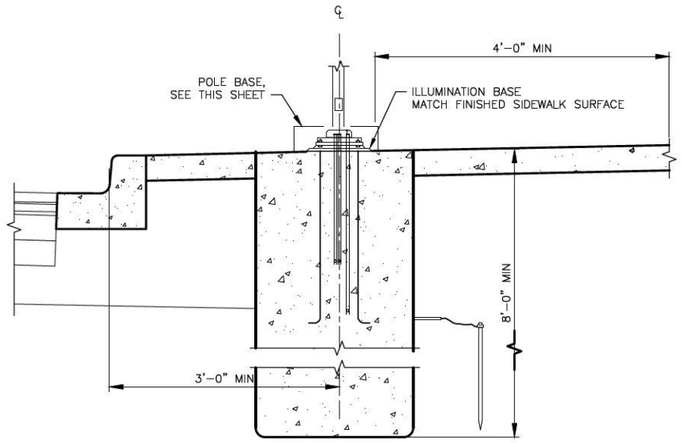

TYPICAL SIDEWALK SECTION AT LUMINAIRE POLES
N.T.S.

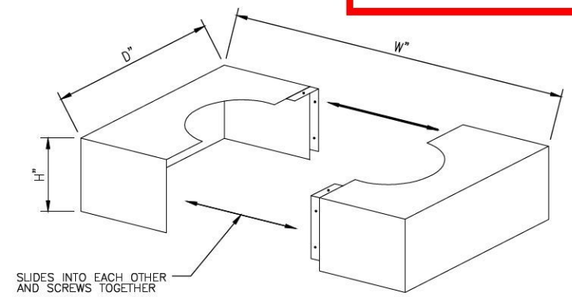

POLE BASE COVER TABLE (1)				
DESCRIPTION	HEIGHT (H)	WIDTH (W)	DEPTH (D)	HOLE DIMENSION
STREET LUMINAIRE POLE	8"	24"	24"	6" ROUND
PEDESTRIAN LUMINAIRE POLE	8"	24"	24"	4" SQ.

(1) DIMENSIONS MAY VARY DEPENDING ON POLE BASE AND SLIP BASE ADAPTER.

POLE BASE
N.T.S.

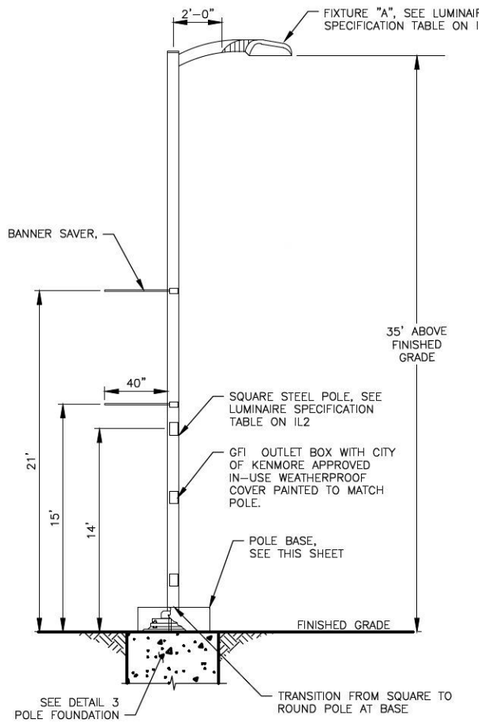

DETAIL 1 – POLE MOUNTED ROADWAY LIGHTING FIXTURE 'A'
N.T.S.

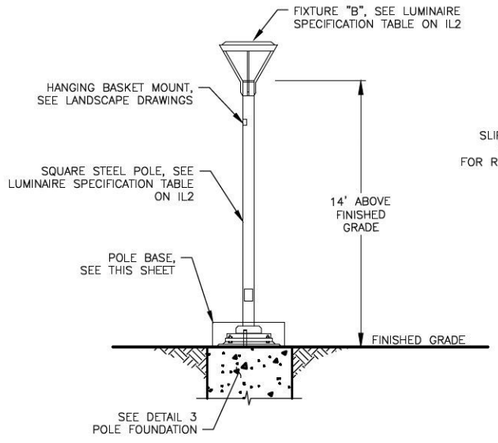

DETAIL 2 – POLE MOUNTED PEDESTRIAN LIGHTING FIXTURE 'B'
N.T.S.

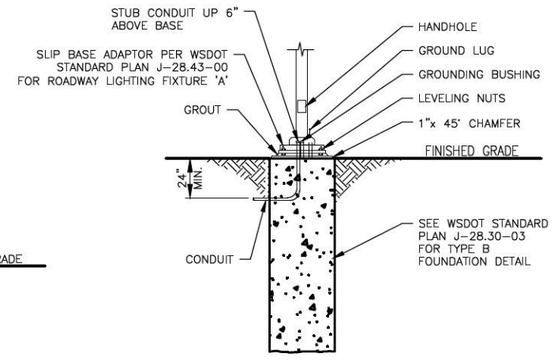

DETAIL 3 – POLE FOUNDATION
N.T.S.

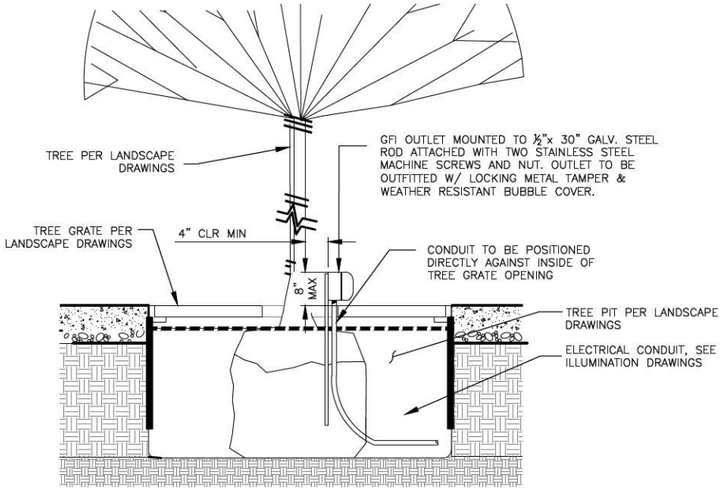

DETAIL 4 – EXTERIOR OUTLET IN TREE PIT
N.T.S.

No.	Date	Revision	By	Appr.
1	3/22/16	ADDENDUM #1	DID	DID

Perteet
425-252-7700 I 1-800-615-9900
2707 Colby Avenue, Suite 900
Everett, Washington 98201

KENMORE BY THE LAKE

ALBERT MARTIN WILLIAMS — STATE OF WASHINGTON — 50475 — REGISTERED PROFESSIONAL ENGINEER

Drawn By	MC	Date 03/08/16
Designed By	MM	03/08/16
Checked By	DD	03/08/16
Approved By		

Project Number

CITY OF KENMORE
NE 181ST ST SOUTH SIDE SIDEWALK
ILLUMINATION DETAILS

Drawing No. IL3
Sheet No. 15 of Total 31

Mar 22, 2016 - 4:01pm DDeKoekkoek X:\Kenmore, City of\Projects\20120170 - Professional Services Contract 12-C108Z\.027 - Kenmore NE 181st St South Side Sidewalk\CADD\Plan Sheets\20120170 IL.dwg Layout Name: IL3

Provided to Builders Exchange of WA, Inc. For usage Conditions Agreement see www.bxwa.com - Always Verify Scale

ADDENDUM #1

CONSTRUCTION SET

DETAIL "ES–2EU"

120/240 ELECTRICAL SERVICE FOR ILLUMINATION METERED & UNMETERED SECTIONS

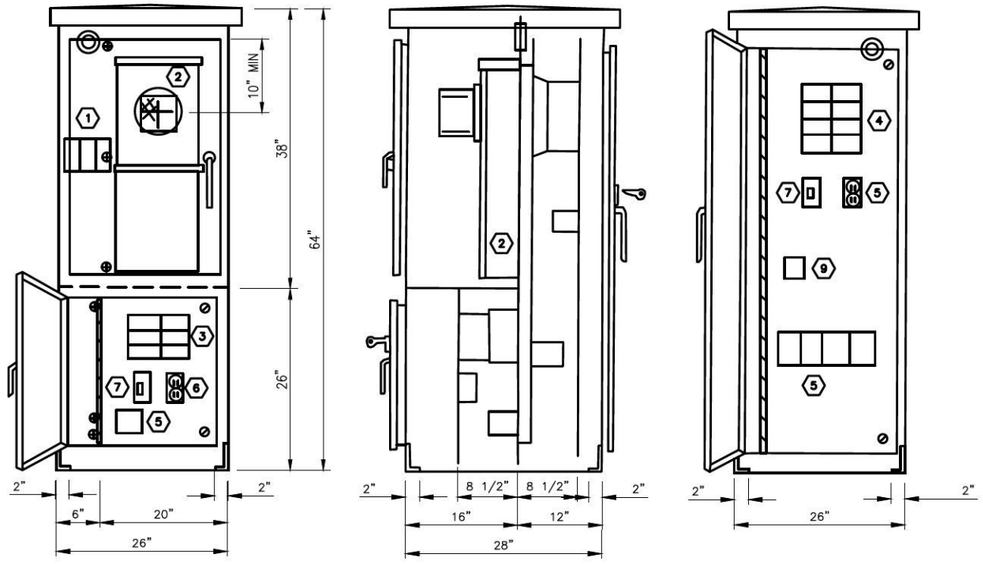

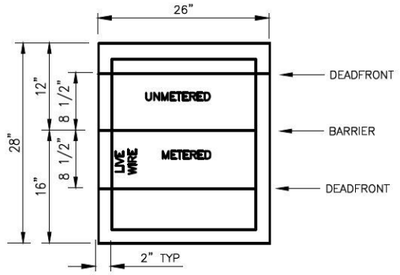

UNDERGROUND SERVICE CONNECTION

CONTRACTOR SHALL COORDINATE WITH POWER COMPANY REGARDING THE SERVICE LOCATION AND CONNECTION PRIOR TO COMMENCING WORK.

METER BASE REQUIRED BY SEATTLE CITY LIGHT / PUGET SOUND POWER.

SERVICE SHALL ENTER THE POLE BASE IN INDEPENDENT CONDUIT. MINIMUM 1–1/2" CONDUIT (RIGID OR FLEX.) INSTALL THROUGH FOUNDATION FOR UNUSED SERVICE CONNECTION.

120/ 240 V. 11 PHASE, 3W

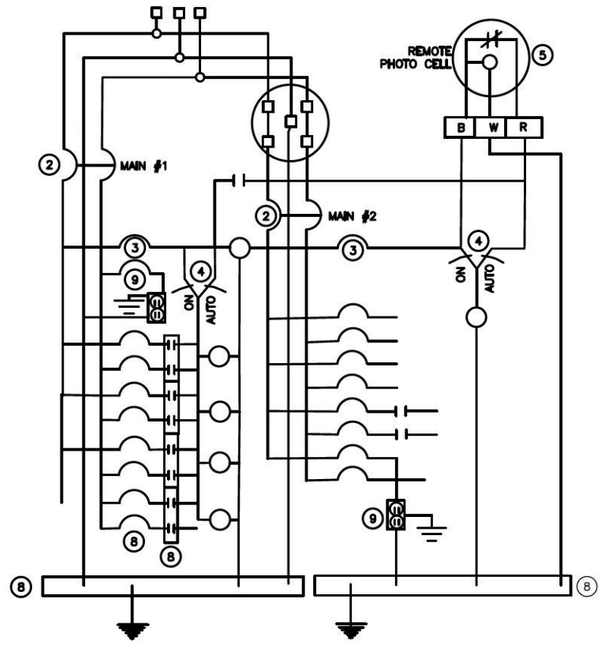

WIRING DIAGRAM

CABINET NOTES:

NEMA 3R, PADMOUNT, 1/8 " ALUMINUM CONSTRUCTION
REMOVABLE EQUIPMENT MOUNTING PAN, HINGED DEADFRONT
4 SCREENED AND GASKET VENTS
DOORS: HEAVY DUTY CONCEALED HINGES (LIFT–OFF TYPE), STAINLESS STEEL VAULT HANDLES, PADLOCKABLE METER DOOR W/ POLISHED WIRE GLASS WINDOW, BEST CX LOCK W/ BLUE CONSTRUCTION CORE ON DISTRIBUTION DOOR CLOSED CELL NEOPRENE GASKET, CARD HOLDER.
FINISH: BARE ALUMINUM OUTSIDE, WHITE POLYESTER POWDER COAT INSIDE

WIRING SCHEMATIC LEGEND

1. METER BASE 200A
2. MAIN BREAKER
3. CONTROL BREAKER (SP–15 AMP)
4. TEST SWITCH (SPST–10 AMP–125 VOLT–"r" RATED)
5. PHOTOELECTRIC CONTROL (TERMINAL BLOCK)
6. BRANCH BREAKER (SEE PANEL SCHEDULE)
7. CONTACTOR
8. NEUTRAL BUS
9. GROUND FAULT RECEPTACLE

COMPONENT SCHEDULE

1. 200 AMP LANDING PADS: 1 PHASE, 3 WIRE, LINE WIRE LUGS: TA250 (#6 AWG TO 250 mcm)
2. METER BASE: 200 AMP, 4 JAW AW #U121314, WITH BYPASS BLOCKS, 5TH JAW AT 9:00 POSITION, (CONTRACTOR TO VERIFY WITH SERVING UTILITY).
3. METERED PANELBOARD: 120/240 VAC, 200 AMP BUS, 1 PHASE, 3 WIRE, COPPER BUS WESTINGHOUSE #BAB 2100 MAIN BREAKER, 200 AMP, 2 POLE WESTINGHOUSE TYPE BAB BOLT–ON BRANCH BREAKERS.
4. UNMETERED PANELBOARD: 120/240 VAC, 200 AMP BUS, 1 PHASE, 3 WIRE, COPPER BUS WESTINGHOUSE #BAB 2100 MAIN BREAKER, 200 AMP, 2 POLE WESTINGHOUSE TYPE BAB BOLT–ON BRANCH BREAKERS.
5. CONTACTOR: LIGHTING RATED: 30 A, 240 VAC COIL, 4 REQUIRED.
6. DUPLEX RECEPTACLE, 120 VAC, GFI, 2 REQUIRED.
7. PHOTO–CELL BYPASS SWITCH: SPST, 15 AMP, 277 VAC, 2 REQUIRED.
8. TERMINAL BLOCK TO REMOTE PHOTO ELECTRIC CELL
9. CONTROL RELAY: 10 AMP, 120 VAC, OCTAL BASE, SPST

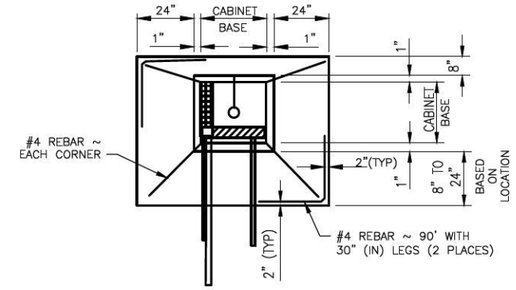

PLAN VIEW

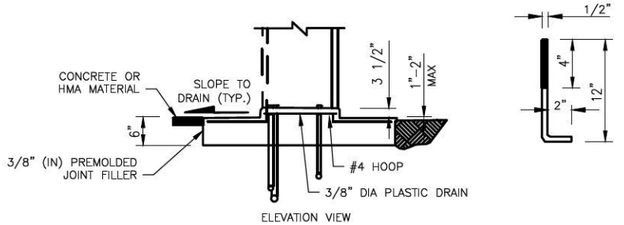

ELEVATION VIEW

CABINET FOUNDATION

NO. MAIN 1	LOCATION: NE 181ST ST SERVING: ILLUMINATION		VOLTS: 120/240 PHASE: 1 MAIN BREAKER: 200 AMP WIRE: 3+ GND			
CKT NO.	LOAD DESCRIPTION	KVA	TRIP AMPS	KVA	LOAD DESCRIPTION	CKT NO.
A	ROADWAY ILLUMINATION	.9	20 — 20	.03	PEDESTRIAN ILLUMINATION	B
C	SPARE	–	20 — 20	–	SPARE	D
E	PHOTOELECTRIC CONTROL	–	15			
REMARKS: SEE SHEET IL3 FOR ONE–LINE DIAGRAM			CONNECTED LOAD: 0.7 KVA 2.9 AMPS DEMAND LOAD (125%): 0.9 KVA 3.9 AMPS			

PANEL SCHEDULE

NO. MAIN 2	LOCATION: NE 181ST ST SERVING: OUTLETS, SIGNAL, IRRIGATION		VOLTS: 120/240 PHASE: 1 MAIN BREAKER: 200 AMP WIRE: 3+ GND			
CKT NO.	LOAD DESCRIPTION	KVA	TRIP AMPS	KVA	LOAD DESCRIPTION	CKT NO.
F	OUTLETS SOUTH	2.0	30 — 30	0.0	OUTLETS NORTH	G
H	OUTLETS POLE	0.7	30 — 30	–	IRRIGATION	I
J	SPARE	–	20 — 20	–	SPARE	K
L	GFCI RECEPTICAL	1.8	20 — 20	–	SPARE	M
REMARKS: SEE SHEET IL3 FOR ONE–LINE DIAGRAM			CONNECTED LOAD: 4.5 KVA 37.5 AMPS DEMAND LOAD (125%): 6.0 KVA 49.9 AMPS			

No.	Date	Revision	By	Appr.
1	3/22/16	ADDENDUM #1	DID	DID

Perteet
425-252-7700 I 1-800-615-9900
2707 Colby Avenue, Suite 900
Everett, Washington 98201

KENMORE WE'RE THE CAMP

WASHINGTON 50475 REGISTERED PROFESSIONAL ENGINEER ALBERT OF VAS

Drawn By	Date
MC	03/08/16
Designed By	
MM	03/08/16
Checked By	
DD	03/08/16
Approved By	

Project Number

CITY OF KENMORE
NE 181ST ST SOUTH SIDE SIDEWALK
ILLUMINATION DETAILS

Drawing No. IL4
Sheet No. 16 of Total 31

Mar 22, 2016 - 4:02pm DDeKoekkoek X:\Kenmore, City of\Projects\20120170 - Professional Services Contract 12-C1082.027 - Kenmore NE 181st St South Side Sidewalk\CAD\Plan Sheets\20120170 IL.dwg Layout Name: IL4

Provided to Builders Exchange of WA, Inc. For usage Conditions Agreement see www.bxwa.com - Always Verify Scale

ADDENDUM #1

NW 1/4 SECTION 12, TOWNSHIP 26 NORTH, RANGE 4 EAST, W.M.

MATCHLINE STA 105+75 SEE SHEET UT2

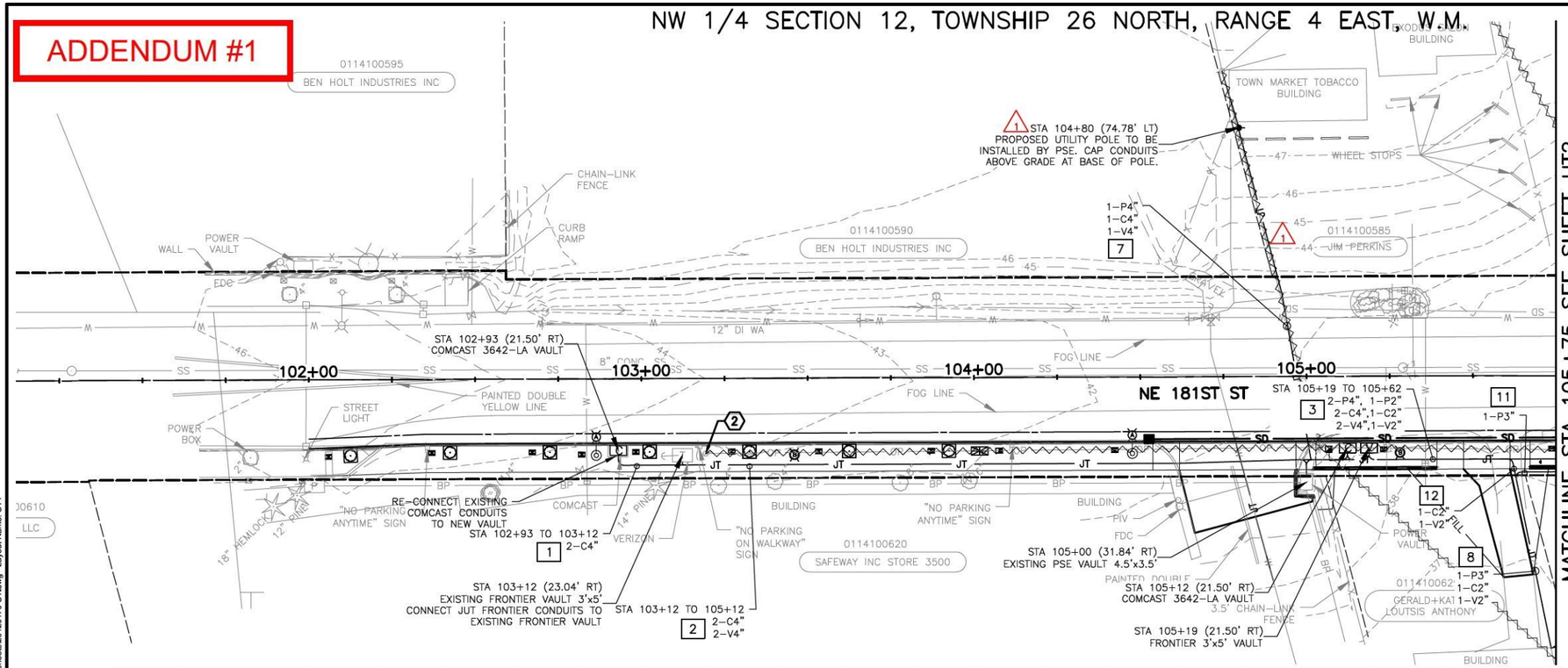

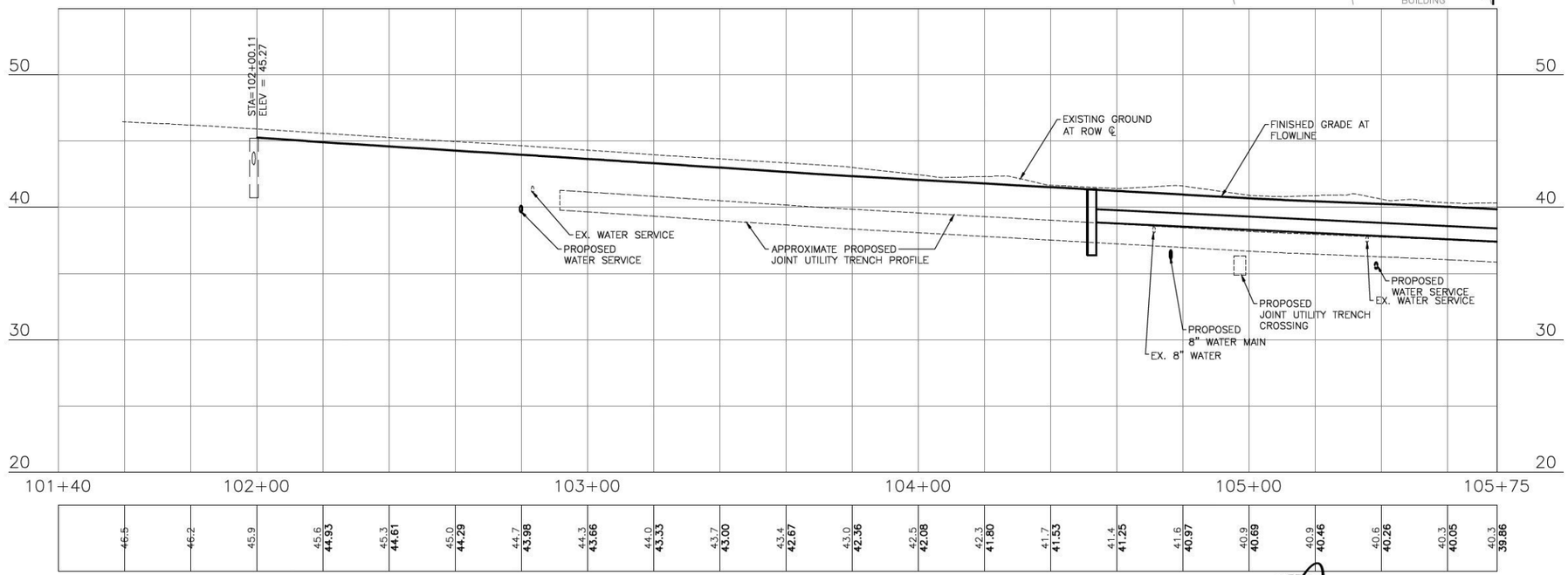

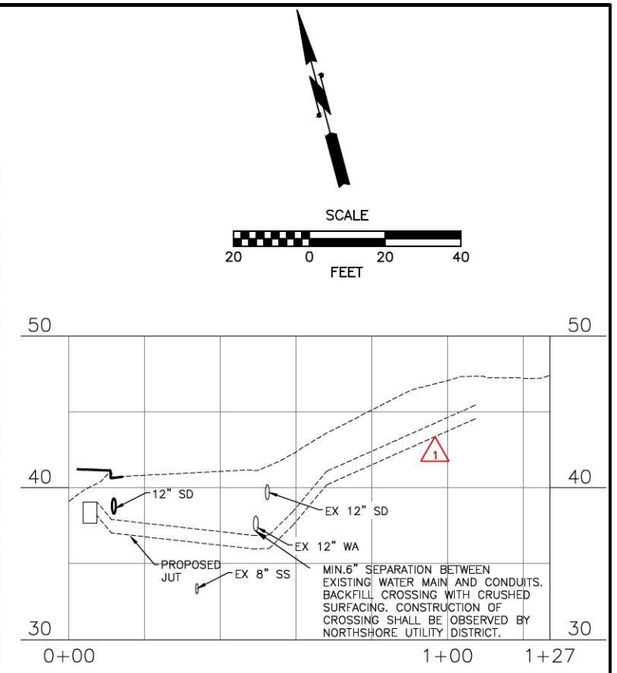

STA 105+00 TRENCH PROFILE

CONSTRUCTION NOTES:

1. RE-ROUTED OVERHEAD POWER.
2. POLE TO BE REMOVED BY PSE.
3. SEE UTILITY CONVERSION DETAILS ON DWG UD2

- C — PROPOSED COMCAST
- V — PROPOSED FRONTIER
- PSE — PROPOSED PUGET SOUND ENERGY
- ROADWAY LUMINAIRE
- PEDESTRIAN LUMINAIRE
- V — FRONTIER VAULT 5'x3'
- C — COMCAST UTILITY VAULT #3642-LA
- PSE MINIPAD TRANSFORMER WITH COMBINATION JUNCTION BOX
- JUNCTION BOX
- POWER POLE

GENERAL NOTES:

1. STATIONS AND OFFSET PROVIDED FOR VAULTS, TRANSFORMERS, AND HANDHOLES ARE REFERENCE TO THE CENTER OF APPURTENANCE LOCATION. ILLUMINATION JUNCTION BOXES AND LUMINAIRES ARE SHOWN FOR REFERENCE ONLY. REFER TO SHEETS IL1-IL3.

2. STATIONS AND OFFSETS PROVIDED FOR VAULTS, TRANSFORMATIONS, AND HANDHOLES ALL REFERENCE TO THE CENTER OF THE APPURTENANCE LOCATION.

No.	Date	Revision	By	Appr.
1	3/22/16	ADDENDUM #1	DID	DID

Perteet
425-252-7700 I 1-800-615-9900
2707 Colby Avenue, Suite 900
Everett, Washington 98201

DUSTIN D. KOEKKOEK — STATE OF WASHINGTON — 49442 — REGISTERED PROFESSIONAL ENGINEER

Drawn By	MC
Date	03/08/16
Designed By	CP
Date	03/08/16
Checked By	DD
Date	03/08/16
Approved By	
Project Number	

CITY OF KENMORE

NE 181ST ST SOUTH SIDE SIDEWALK

UTILITY CONVERSION PLAN

Drawing No. UT1

Sheet No. 17 of Total 31

Mar 22, 2016 - 12:56pm DDeKoekkoek X:\Kenmore, City of\Projects\20120170 - Professional Services Contract 12-C10820.027 - Kenmore NE 181st St South Side Sidewalk\CADD\Plan Sheets\20120170 UT.dwg Layout Name: UT1

Provided to Builders Exchange of WA, Inc. For usage Conditions Agreement see www.bxwa.com - Always Verify Scale

NW 1/4 SECTION 12, TOWNSHIP 26 NORTH, RANGE 4 EAST, W.M.

ADDENDUM #1

LEGEND

- CSTC
- GRAVEL BORROW BACKFILL
- COMPACTED SUBGRADE
- HOT MIX ASPHALT OR CONCRETE SIDEWALK
- ~ LOCATE RIBBON, PLACED 12" ABOVE HIGHEST CONDUIT IN EACH RUN
- (P) PROPOSED PSE CONDUIT
- (C) PROPOSED COMCAST CONDUIT
- (V) PROPOSED FRONTIER CONDUIT
- XX TRENCH NUMBER, SEE UT1–UT2 FOR LOCATIONS.

NOTES:

1. CONTRACTOR TO INSTALL THE NUMBER CONDUITS AS SHOWN.
2. CONDUITS INDICATE OWNER AND SIZE.
3. TRENCH WIDTH AND DEPTH ARE MINIMUMS. CONTRACTOR SHALL ADJUST TO MAINTAIN 12" BETWEEN CONDUITS AND EXISTING UTILITIES AND ENSURE PROPER COMPACTION OF BACKFILL.
4. SEE SHEET TS1 FOR RELATIONSHIP BETWEEN UTILITY TRENCH LOCATION, SIDEWALK, CURB, TREE WELLS AND WALLS.

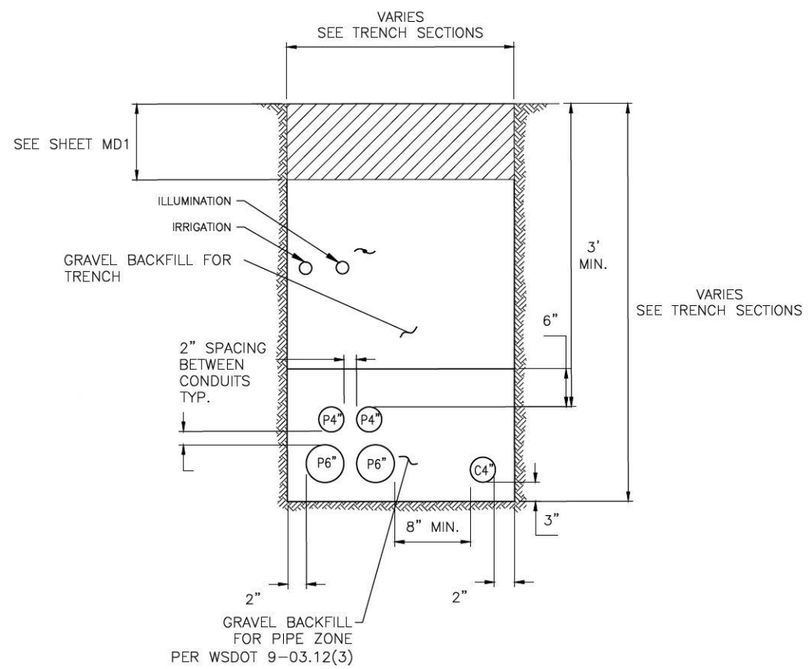

JOINT UTILITY TRENCH TYPICAL SECTION

N.T.S.

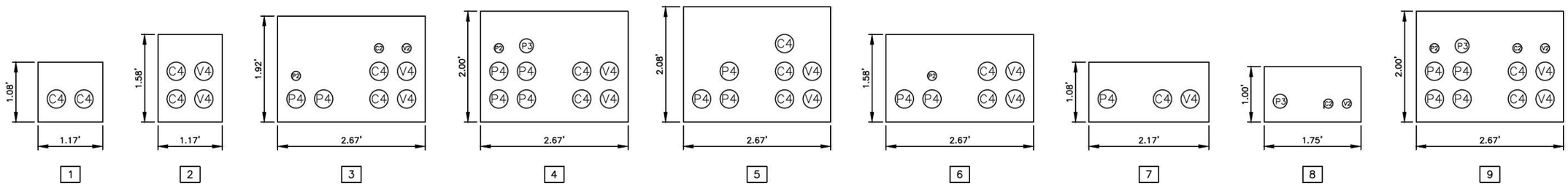

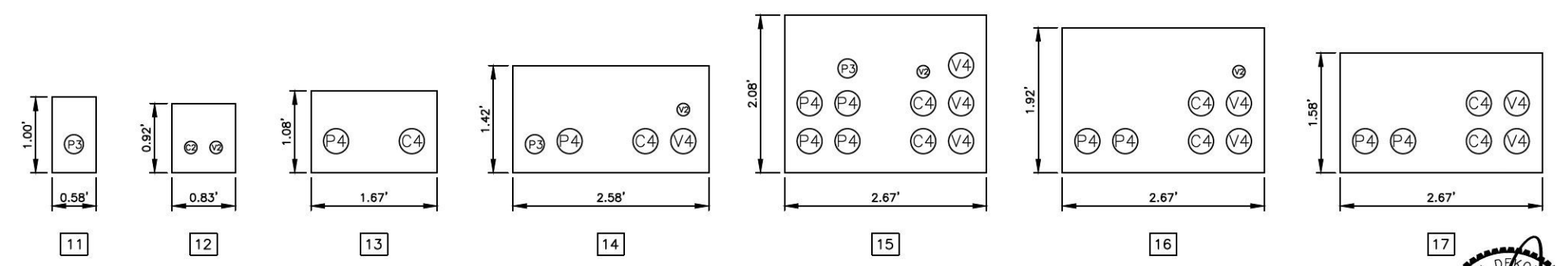

GENERAL NOTES:

1. SEE SPECIAL PROVISIONS FOR FRANCHISE UTILITY AGREEMENTS AND FRANCHISE UTILITY PLANS.
2. SHEETS UT1–UT2: JOINT UTILITY TRENCH SHOWN SCHEMATICALLY. PLACE ALL VAULTS, PEDESTALS, HANDHOLES, AND BOXES WITHIN THE RIGHT–OF–WAY AND OUTSIDE OF DRIVEWAYS UNLESS OTHERWISE APPROVED BY THE ENGINEER.
3. CONTRACTOR SHALL PROVIDE ALL NECESSARY COORDINATION, LAYOUT, SURVEYING, TRENCHING, EXCAVATION, BEDDING, BACKFILL, AND RESTORATION FOR THE FRANCHISE UTILITIES TO SUCCESSFULLY COMPLETE THE CONVERSION.
4. CONTRACTOR SHALL FIELD VERIFY LOCATIONS, ELEVATIONS, TYPE AND SIZE OF ALL EXISTING UTILITIES PRIOR TO CONSTRUCTION OF NEW UTILITY CONDUITS AND SHALL ADJUST NEW UTILITY CONDUITS AS REQUIRED. CONTRACTOR SHALL NOTIFY ENGINEER IMMEDIATELY OF ANY CONFLICTS NOT SHOWN ON THE PLANS.
5. THE JOINT UTILITY TRENCH LAYOUT, SWEEPS, VAULTS AND OTHER FEATURES SHOWN ARE APPROXIMATE. ADJUST AS NECESSARY TO MEET FRANCHISE UTILITY REQUIREMENTS AND TO PROVIDE A COMPLETE, FUNCTIONING SYSTEM. FRANCHISE UTILITIES WILL PROVIDE ALL CONDUIT AND VAULTS. CONTRACTOR WILL INSTALL ALL CONDUIT AND VAULTS PER THE REQUIREMENTS AND SPECIFICATIONS OF THE FRANCHISE UTILITY.
6. UTILITIES OR INTERFERING PORTIONS OF UTILITIES THAT ARE ABANDONED IN PLACE SHALL BE REMOVED BY THE CONTRACTOR TO THE EXTENT NECESSARY TO ACCOMPLISH THE WORK. THE CONTRACTOR SHALL PLUG THE REMAINING EXPOSED ENDS OF ABANDONED UTILITIES, UNLESS OTHERWISE REQUIRED BY THE ENGINEER.
7. ALL CONDUITS AND VAULTS/HANDHOLES/PEDESTALS TO BE INSPECTED BY UTILITY COMPANY INSPECTOR.
8. ALL CONDUITS ENTERING AND EXITING VAULTS MUST HAVE A MINIMUM 2–FOOT STRAIGHT STRETCH OF CONDUIT PRIOR TO THE INSTALLATION OF ANY BENDS, UNLESS NOTED OTHERWISE OR APPROVED BY THE UTILITY COMPANY'S INSPECTOR.
9. CAP AND MARK ENDS OF ALL CONDUITS WITH 2" DIAMETER PVC MARKER. MARKERS SHALL EXTEND FROM INVERT OF CONDUITS TO 18" ABOVE FINISHED GRADE AND SHALL IDENTIFY UTILITY MARKED.
10. ALL UTILITY POLES TO BE INSTALLED BY OTHERS.
11. CONTRACTOR SHALL TERMINATE ALL CONDUIT IN VAULTS, PEDESTALS, HANDHOLES OR 2–FEET ABOVE GRADE.
12. WORK SHALL BE SEQUENCED TO ALLOW CONTINUED OPERATION OF ALL EXISTING UNDERGROUND & OVERHEAD UTILITIES UNTIL THE WORK IS COMPLETE.
13. EXISTING JUNCTION BOXES, VAULTS, OR CABINETS FOR PUBLIC AND PRIVATE UTILITIES SHALL BE PROTECTED IN PLACE UNTIL SUCH TIME THE CONTRACTOR COORDINATES THEIR REMOVAL WITH THE APPROPRIATE OWNER.
14. COORDINATE WITH PRIVATE UTILITIES PRIOR TO REMOVAL OR DECOMMISSIONING OF ANY ASSOCIATED EQUIPMENT.
15. SEE ILLUMINATION AND IRRIGATION PLANS FOR MORE DETAILS.

No.	Date	Revision	By	Appr.
1	3/22/16	ADDENDUM #1	DID	DID

Perteet
425-252-7700 | 1-800-615-9900
2707 Colby Avenue, Suite 900
Everett, Washington 98201

KENMORE BY THE LAKE

DUSTIN M. DEKOEKKOEK — STATE OF WASHINGTON — 49442 — REGISTERED PROFESSIONAL ENGINEER

Drawn By	MC	Date 03/08/16
Designed By	CP	03/08/16
Checked By	DD	03/08/16
Approved By		

Project Number

CITY OF KENMORE

NE 181ST ST SOUTH SIDE SIDEWALK

UTILITY CONVERSION DETAILS

Drawing No. UD1

Sheet No. 19 of Total 31

Mar 22, 2016 - 1:00pm DDeKoekkoek X:\Kenmore, City of\Projects\20120170 - Professional Services Contract 12-C10820.027 - Kenmore NE 181st St South Side Sidewalk\CADD\Plan Sheets\20120170 UD.dwg Layout Name: UD1

Provided to Builders Exchange of WA, Inc. For usage Conditions Agreement see www.bxwa.com - Always Verify Scale

ADDENDUM #1

NE 181st ST Sidewalk Project(s)
Project Parcel #011410-0620 / Safeway Inc Store 3500

IMPROVEMENTS PERMIT

The City of Kenmore (hereafter "City") currently has a Project in the vicinity of property owned by Safeway Inc. Store 3500, (hereafter "Owner") located at 6850 NE Bothell Way, Kenmore, WA (hereafter "Property"). The City agrees to perform certain work on the Property to facilitate the construction of the project.

1. **Scope of Permit.** Now, therefore, in consideration of the mutual covenants contained herein and other valuable consideration, the receipt and sufficiency of which are hereby acknowledged, the Owner hereby grants to the City, its contractors or assigns, subject to the conditions hereafter set forth, a temporary permit over the following described property:

Property description: ALDERWOOD MANOR #14 LESS CO RD & LESS POR FOR RD PER REC #20070615002934

Tax Parcel No.: 011410-0620

1.1. Driveway Reconstruction. The Owner hereby grants to the City, its contractors or assigns, subject to the conditions hereafter set forth, a temporary permit to enter upon said parcel of land and work on the land for the purposes of reconstructing a portion of Owner's existing / proposed driveway so as to conform to said improvements. The reconstruction of Owner's driveway shall occur on the portion of Owner's land approximately shown **Area D** on **Exhibit "A"**, attached hereto and made a part hereof by reference.

Any portion of Owner's driveway lying within the City road right-of-way shall be paved. Reconstruction of Owner's driveway outside the City road right-of-way shall be equal in kind to the existing driveway on private property.

Select One: X Accepted ☐ Rejected ☐ Not Applicable

1.2. Utility Undergrounding / Relocation. The Owner hereby grants to the City, its contractors or assigns, subject to the conditions hereafter set forth, a temporary Permit over Owner's Property approximately shown as **Area U** on **Exhibit "A"**, attached hereto and made a part hereof by this reference, necessary to trench and/or relocate aerial utility lines from the right-of-way to connection point(s) as determined by the City. This work may include but is not limited to pavement, landscaping and other ground surface removal, neat-line trenching and backfill, conduit installation, conduit attachment to buildings, or service pole / aerial utility line relocation. Undergrounding and/or relocation shall be provided to reestablish existing electrical service; any system upgrades are the responsibility of the Owner.

Select One: ☐ Accepted ☐ Rejected X Not Applicable

Provided to Builders Exchange of WA, Inc. For usage Conditions Agreement see www.bxwa.com - Always Verify Scale

ADDENDUM #1

1.3. Property Restoration. The Owner hereby grants to the City, its contractors or assigns, subject to the conditions hereafter set forth, a temporary permit to enter upon said parcel of land and work on the land for the purposes of restoring a portion of Owner's remaining property so as to conform to said improvements The property restoration shall occur on the portion of Owner's land approximately shown as **Area R** on **Exhibit "A"**, attached hereto and made a part hereof by this reference.

Select One: ☐ Accepted ☐ Rejected X Not Applicable

2. Conditions. This Permit is granted and accepted subject to the following conditions:

a. This Improvements Permit will commence when construction starts on the Project and terminate no later than December 31, 2016.

b. Upon completion of the construction work, the City shall leave the premises substantially the same as it was on the day work commenced.

c. Owner shall not obstruct, or allow any tenant or third party to obstruct, or, in any manner, prevent or interfere with performance of the work described in paragraph 1.

d. If the contractor does not have permission to enter your property for the purposes accepted above, you will need to take care of it at a later date at your own expense.

e. Owner grants permission to the City, its contractors or assigns, the right to access the property beyond the shown limits of the permit area, as necessary, to construct necessary improvements.

f. The City agrees to keep one-half of the driveway open to the maximum extent feasible during any and all work, including utility relocations, performed under this Improvements Permit.

Safeway Inc. Store 3500

By: Marilyn Beardsley
Printed Name: Marilyn E. Beardsley
Title: Vice President, Real Estate Law
Date: 3-21-16

By: _____
Printed Name: _____
Title: _____
Date: _____

Accepted by the City of Kenmore

By: _____
Printed Name: Kent Vaughan
Title: Senior Civil Engineer / PM
Date: Mar 22, 2016

Provided to Builders Exchange of WA, Inc. For usage Conditions Agreement see www.bxwa.com - Always Verify Scale

ADDENDUM #1

Exhibit A

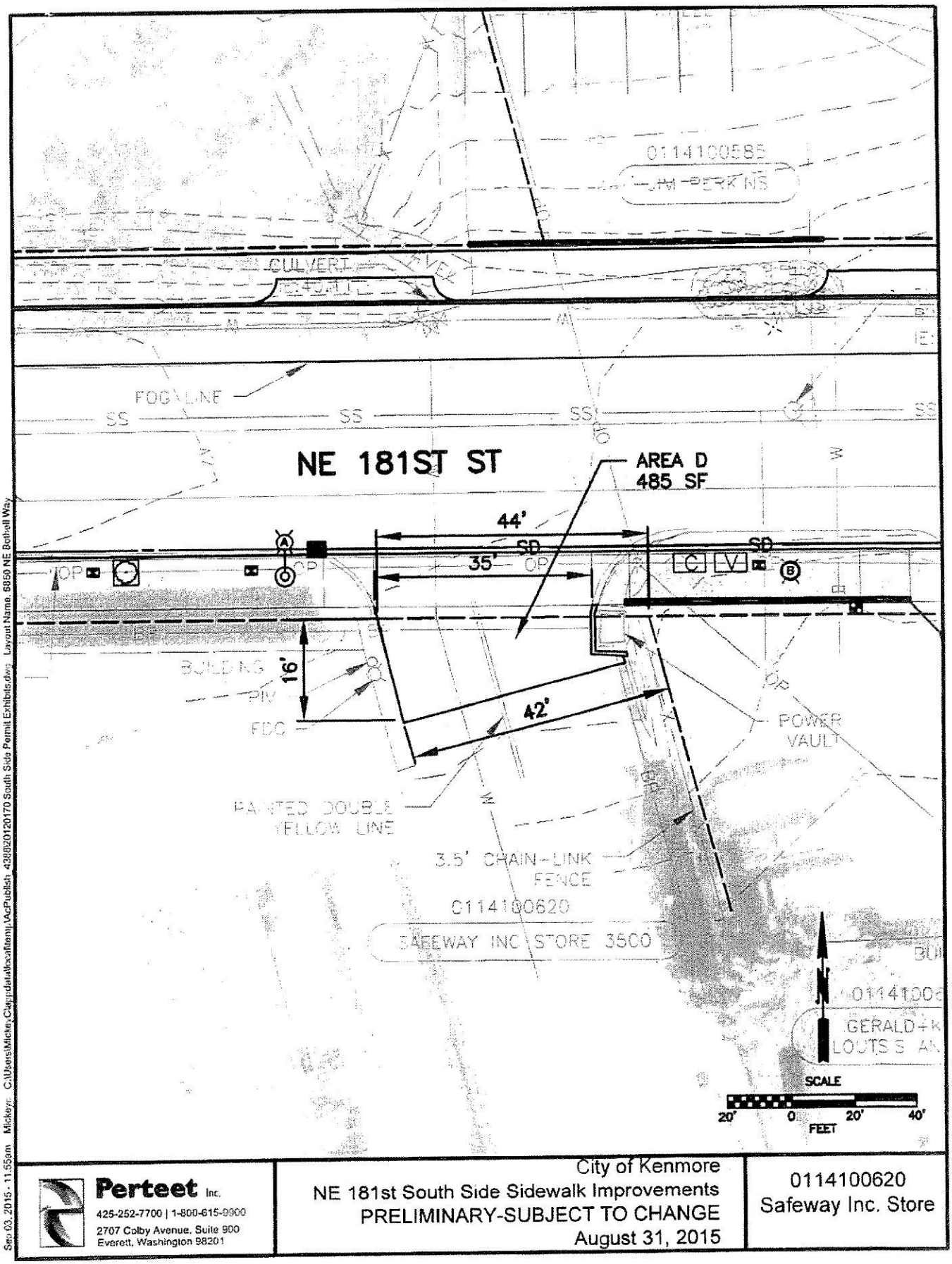

Sep 03, 2015 - 11:55am Mickeys C:\Users\MickeyClapp\data\local\temp\AcPublish_4388\20120170 South Side Permit Exhibits.dwg Layout Name: 6850 NE Bothell Way

Perteet Inc. 425-252-7700 | 1-800-615-9900 2707 Colby Avenue, Suite 900 Everett, Washington 98201	City of Kenmore NE 181st South Side Sidewalk Improvements PRELIMINARY-SUBJECT TO CHANGE August 31, 2015	0114100620 Safeway Inc. Store

Provided to Builders Exchange of WA, Inc. For usage Conditions Agreement see www.bxwa.com - Always Verify Scale