KENMORE STREET
TREE PLAN

DECEMBER 2004

Table of Contents

Introduction 1

Background
Vision Statement
Goals
Policy and Planning Support

Analysis of Existing Street Trees 4

Street Segments Analysis
General Findings

Street Tree Plan 2004-2010 25

Street Tree Plan
Peripheral Green Streets
Central Green Streets
Downtown Green Streets & SR-522
Alternate Trees
Single-family subdivisions and short subdivisions

Street Tree Lists 31

Recommended Trees
Not Recommended as Street Trees in Kenmore

Management Plan 33

City's Consulting Arborist

Planting and Performance Standards 33

Planting Strip and Sidewalk Considerations
Planting Standards
Planting Standards of Workmanship
Pruning Standards
Pruning Standards of Workmanship
Tree Maintenance Standards
Tree Replacement Policy

Educational Resources 35

References 35

Appendix A: Copies of Maps 36

Appendix B: Planting Exhibits 45

INTRODUCTION

Background

Kenmore continues to embark on improvements that will visibly improve the city and quality of life in the community. This is shown within the city's Comprehensive Plan (guiding future growth in the city as a whole), its Park & Recreation Master Plan (guiding the development of open space), and its Downtown Plan (guiding the development of a civic and commercial core for community life). Closely integrated with the Kenmore's Comprehensive Plan, Park & Recreation Master Plan, and Downtown Plan, the Street Tree Plan provides direction for the care and enhancement of street corridors that interconnect the various parts of the city.

In 2003, Kenmore obtained a Community Forestry Assistance Grant from the Department of Natural Resources. The purposes of this matching grant lent itself to the development a Street Tree Plan for the purposes of protecting, preserving, and enhancing the urban forest of Kenmore. The Street Tree Plan provides environmental and community benefits in increasing tree coverage along the cities streets. Street trees filter and clean the air and further modify the climate through providing shade and windbreaks. Street trees also mitigate noise pollution by buffering the noise level of the city. Stormwater runoff and erosion are also reduced by street trees. The urban forest sustains wildlife habitat by providing suitable environments and travel corridors for birds and other wildlife. Property values are also influenced by street trees as their presence can increase the value and desirability of an individual lot and residential street. Perhaps most significantly is the relationship of street trees and the urban forest to the quality of life in Kenmore.

The Street Tree Plan provides a vital part of a self-sustaining urban forest and produces a continuing positive influence on quality of life. It acts as a guide to the future, articulating a strategy for enhancing and managing the street tree resources in the city. As a policy document, it describes the type and character that the street trees in Kenmore should become as time and funds are available. This plan will ensure that the communities in Kenmore will remain desirable and livable for years to come.

Vision Statement

The street tree plan develops a strategy to address the community goal of a network of green streets linking its open spaces, increasing community pride, and enhancing its street corridor aesthetic, providing a positive, daily experience of the benefits of street trees.

Goals

1. To enhance the overall canopy of the major arterials throughout the city.
2. To encourage street tree planting that increase environmental benefits including noise reduction, cleaner air and water, and temperature regulation (shade).
3. To enhance the connections between the city's green spaces and significant open spaces through a network of green streets.
4. To ensure that tree maintenance programs keep up with the growth of the community street trees in the right-of-way.
5. To encourage community identity and character while enhancing the scenic beauty of the city.
6. To select appropriate street trees for planting within the right-of-way.
7. To encourage and maintain a balance between tree-lined streets and safe utility corridors.
8. To achieve active participation of the community in tree related activities by involving citizens, community groups, and nonprofit organizations in the care and enhancement of the community's street trees.
9. To increase the awareness and importance of the benefits of the community street trees among local business owners, residents, and developers.
10. To encourage consistency with other adopted plans to achieve citywide goals.

Policy and Planning Support

The fact that street trees are valued by the public is clearly expressed in the city's Comprehensive Plan, Park & Recreation Master Plan, and Downtown Plan. The Street Tree Plan fulfills and supports the following items within the City of Kenmore's three main plans:

Final Integrated Comprehensive Plan and Environmental Impact Statement March 2001:

Policy LU-4.5.2 *(Page 4B-11)*	Promote the concept of a "center" through the use of common design themes such as street and landscape materials, and building styles and materials.
Policy LU-4.5.3 *(Page 4B-11)*	Enhance the aesthetic quality and compatibility among land uses through landscaping, building orientation and setbacks, traffic control and other measures to reduce potential conflicts. Distinctive or historical local character and natural features should be reflected in development design to provide variety within Downtown.
Policy LU-5.2.6 *(Page 4B-12)*	Promote pedestrian friendly streets with street furniture and trees. Develop street trees and vegetation standards that unify the Downtown, define Downtown streets, and allow for appropriate business visibility. Incorporate street furniture and art into Downtown street standards, including bench, trash and recycling receptacles, tree grates, street lamps, and other amenities.
Policy LU-6.1.1 *(Page 4B-13)*	Develop an integrated and hierarchical street tree, signage, and public art program to identify Downtown, government facilities, and parks throughout the community.
Policy LU-12.3.2 *(Page 4C-8)*	Create a hierarchy of tree and vegetation standards, signs, light standards, public art, kiosks, or other features to direct users to key destinations. Apply these visual cues to the arterials, off-street trail network, and key local and regional destinations.
Policy LU-13.5.1 *(Page 4D-20)*	Adopt an urban forestry strategy which encourages the preservation and protection of trees on public and private properties.
Policy LU-13.5.2 *(Page 4D-20)*	Through urban forestry, street design standards and parks programs, encourage the planting of street trees through out the City.
Objective 35.1 *(Page 6-49)*	Create a sidewalk and pedestrian trail network linking neighborhoods, Downtown, and key community destinations.
Objective 39.4 *(Page 7-18)*	Connect open spaces with parks and trails to create a system of linear linkages between shorelines, parks, and environmentally sensitive areas. Consider viewpoints, easements, bikeways and scenic drives when looking for linkages
Policy P-39.4.3 *(Page 7-18)*	Identify important regional and local view corridors, and scenic drives. Consider views enjoyed by significant numbers of the public, including pedestrians and drivers.

Environmental Impact Statement — Comprehensive Plan March 2001:

Aesthetics/Light and Glare *(Page 12-101)*	Trees are lacking along major arterials. Most of the residential areas surrounding the downtown commercial area have no sidewalks or street trees.

City of Kenmore Parks and Recreation Master Plan April 2003:

Guiding Principles *(Page 5)*	Natural systems include, but are not limited to: wildlife habitat and corridors, shorelines, sensitive areas…stream corridors and streetscapes. These natural systems create a network of open space throughout Kenmore and connect the community to its natural surroundings.

Kenmore Downtown Plan April 2003 Final

Guiding Principles *(Page 1-16)*	Create an identity for Downtown and SR-522 by giving priority consideration to improving the appearance of the physical environment through design guidelines, sidewalks, landscaping, street trees, public art, and signage.

ANALYSIS OF EXISTING STREET TREES

Street Segments Analysis

The Street Tree Plan develops a strategy to address the community goal of a network of green streets linking the open spaces within the city and enhancing the character and aesthetics of Kenmore. Using various maps from the city's Comprehensive Plan, Parks & Recreation Plan, and Downtown Plan, the Street Tree Plan identifies the significant corridors throughout the city that should be further examined as potential green streets. The Downtown Plan offers further detail and refinement to those local streets in the downtown core that should receive a unique identity. Copies of all maps that were used are available in Appendix A. The corridors were then broken down into distinct street segments based on layout and geography (see Figure 1). These street segments were analyzed by Urban Forestry Services, Inc. in April 2004, for appropriateness for street tree plantings and for any street tree planting patterns there may be. Specifically, the analysis included:

1. Identification of segments that show an apparent lack of space or other obvious impediment to street tree planting.
2. Identification of dominant tree species in the right-of-way, general health and appearance of the trees as a whole, and any obvious planting pattern of trees along the segment.
3. Digital images per segment to reflect general character.

General Findings

From observations made during the overall analysis, several general findings emerged. These include the following:

1. Improper tree selection. The conditions of current planting sites may not have considered future, available planting space and the location of overhead utility lines in relation to mature tree sizes.
2. Lack of appropriate routine pruning. Structural pruning, especially when the trees are young could have prevented much of the incidence of topping to avoid utility line conflicts and damage to weakly structured branches.
3. Appropriate planting space. Appropriate planting space was hard to determine with lack of sidewalk or definition of right-of-way.
4. Avoid topping. Many trees had been topped, which compromised their structural integrity (resulting in an increase of potential damage), decreased their aesthetics, and will cost more to maintain. (Topping leads to decay and creates hazardous trees due to heavy sprouting on rotting branches.)
5. Large trees and power lines are not compatible. To provide consistent and safe power to their customers, Puget Sound Energy has and will continue to prune large trees that are in conflict with utility lines.

Figure 1. Identified Street Segments for Analysis:

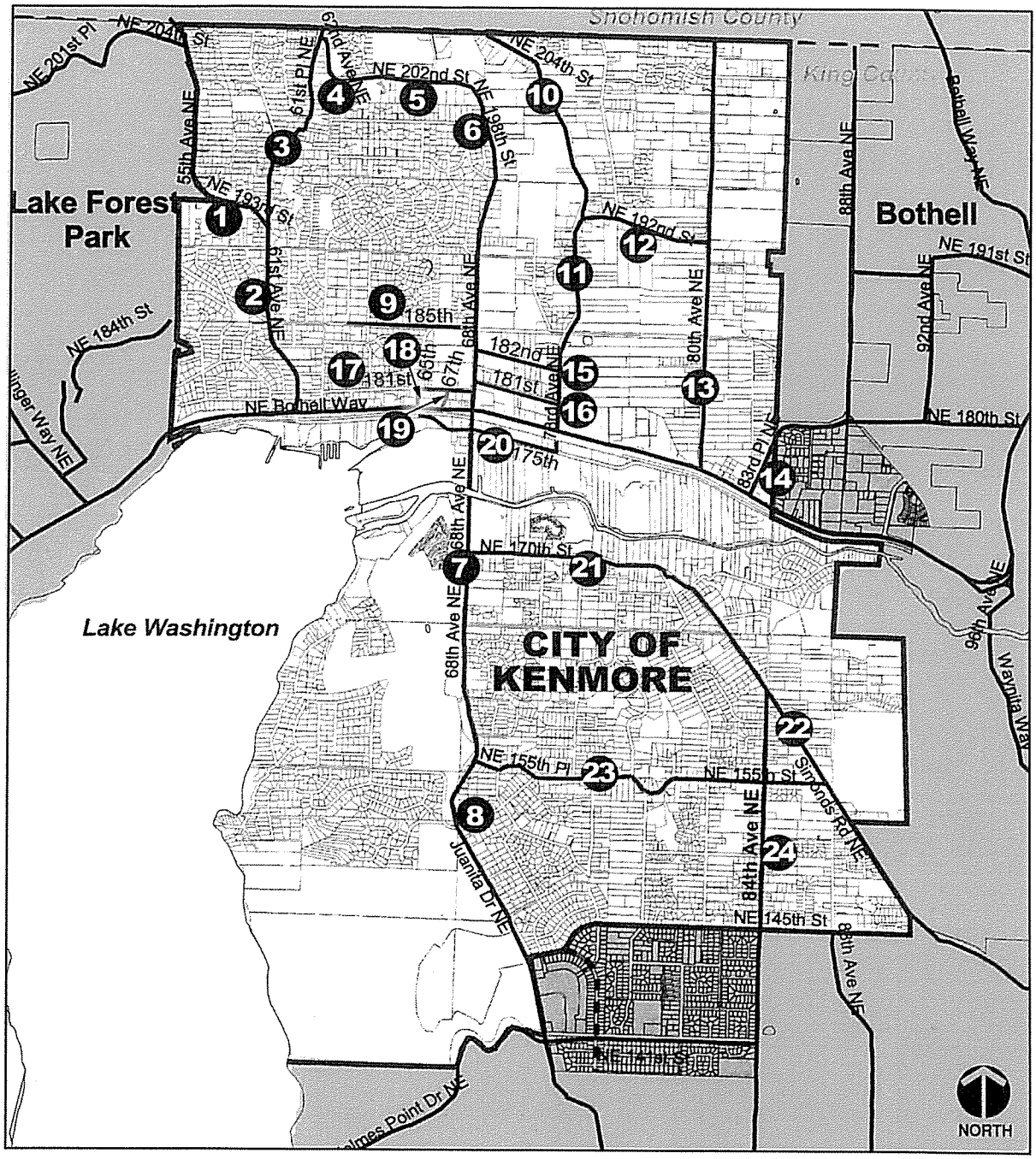

1. NE 193rd St. (from 55th Ave. NE to 61st Ave. NE)
2. 61st Ave. NE (from Bothell Way to NE 193rd Street)
3. 61st Place NE (from NE 193rd St. to City Limit)
4. 62nd Ave. NE (from 61st Pl. NE to NE 202nd St.)
5. NE 202nd St. (from 62nd Ave. NE tone 198th St.)
6. 198th St. (from NE 202nd St. to 68th Ave. NE)
7. 68th Ave. NE (from NE 198th St. to Juanita Dr. NE)
8. Juanita Dr. NE (from 68th Ave. NE to City Limit)
9. NE 185th St. (from 68th Ave. NE to it's dead end)
10. NE 204th St. (from City Limit to 73rd Ave. NE)
11. 73rd Ave. NE (from NE 204th St. to Bothell Way)
12. NE 192nd St. (from 73rd Ave. NE to 80th Ave. NE)
13. 80th Ave. NE (from City Limit to Bothell Way)
14. 83rd Place NE (from City Limit to Bothell Way)
15. NE 182nd St. (from 68th Ave. NE to 73rd Ave. NE)
16. NE 181st St. (from 68th Ave. NE to 73rd Ave. NE)
17. NE 181st St. (from 68th Ave. NE to 65th Ave. NE)
18. 65th Ave. NE (from NE 181st St. to Bothell Way)
19. 67th Ave. NE (from NE 181st St. to Bothell Way)
20. NE 175th St. (approx. from 67th Ave. NE to 73rd Ave. NE)
21. NE 170th St. (from 68th Ave. NE to Simonds Rd. NE)
22. Simonds Rd. NE (from NE 170th St. to City Limit)
23. NE 155th Place (from Juanita Dr. NE to Simonds Rd. NE)
24. 84th Ave. NE (from Simonds Rd. NE to City Limit)

1. NE 193rd Street (from 55th Ave. NE to 61st Ave. NE)

Approximate Length:	.2 miles
Planting Spaces:	No trees have been planted in the right-of-way and it appears there is no space defined for planting or available.
Site Observations:	This is a semi-rural neighborhood with many large conifer and deciduous trees on private property. There are no curbs or sidewalks. Utilities are on both sides. No reasonable planting space appears to be available.

Tree Species	Sizes	Condition	Comments
Red maples	—	—	All on private property
Native conifers	—	—	—
Many varieties	—	—	All on private property

2. 61st Avenue NE (from Bothell Way to NE 193rd Street)

Approximate Length:	.7 miles
Planting Spaces:	There are about 40 unplanted spaces on the west side (utilities potentially under ground).
Site Observations:	This street runs through a relatively natural and heavily planted forested neighborhood. There area large trees on private property. At the north end there are 15 Red Maples planted very close to sidewalks in small cutouts. Native growth areas on east side, central portion. Conifers are growing under power lines that conflict with utilities. Alders in native growth area are dangerously hanging over the road. Near Bothell Way, there are 4 large, previously topped, London Plane trees heaving the sidewalks.

Tree Species	Sizes	Condition	Comments
Red maples	10”–14”	Poor form	Growing under utilities.
Douglas firs	—	—	Growing under utilities.
London plane tree	—	Poor form	Topped with poor regrowth structure.
Norway maple	—	Very poor form	Severely topped.

3. 61st Place NE (from NE 193rd Street to City Limit)

Approximate Length:	.4 miles
Planting Spaces:	There appears to be space for anywhere from 25 to 50 trees on the west side, which doesn't have a sidewalk.
Site Observations:	Several red maples with poor form. Trees are grown in sidewalks. Sidewalks replaced with blacktop and paving stone near trees. Significant past and future sidewalk damage expected. Large native and ornamental trees in private neighborhoods. No sidewalks on the west side, north end. Some trees topped for utilities. Plum tree planting in sidewalks begins at 197th.

Tree Species	Sizes	Condition	Comments
Red maples	10"–14"	Some have poor form	> 100. Growing under utilities on east side. Call for corrective pruning.
Blireiana Plums	8"–12"	Poor quality	Too close to sidewalks.
Blireiana Plums	5"–7"	Poor condition	Approx. 50.

4. 62nd Avenue NE (from 61st Pl. NE to NE 202nd St.)

Approximate Length: .2 miles

Planting Spaces: —

Site Observations: No curbs or sidewalks. Extremely dangerous native Red Alders threaten road safety and should be removed. There are a few Red Maple trees near north intersection. More large native and ornamental trees in private property.

Tree Species	Sizes	Condition	Comments
Red maples	5"–7"	—	—

5. NE 202nd Street (from 62nd Ave. NE tone 198th St.

Approximate Length:	.5 miles
Planting Spaces:	No planting spaces. Some planting space potential after curbs and sidewalks installed.
Site Observations:	No curbs or sidewalks. Right-of-way difficult to determine. Private and native landscapes mixed.

Tree Species	Sizes	Condition	Comments
—	—	—	—

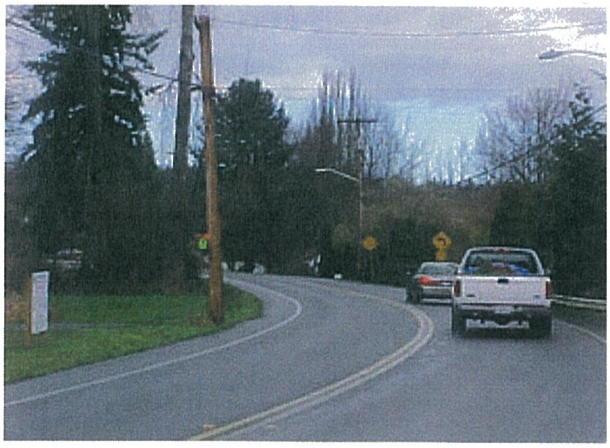

6. 198th Street (from NE 202nd St. to 68th Ave. NE)

Approximate Length:	.25 miles
Planting Spaces:	No planting spaces. Some planting space potential after curbs and sidewalks installed.
Site Observations:	No curbs or sidewalks. Large native and ornamental trees in private yards.

Tree Species	Sizes	Condition	Comments
—	—	—	—

7. 68th Avenue NE (from NE 198th St. to Juanita Drive NE)

Approximate Length:	2.3 miles
Planting Spaces:	No room for street trees. No planting spaces. All the way to Bothell Way NE – no planting spaces.
Site Observations:	No curbs or sidewalks. Native growth with native conifer on both sides. Utilities both sides. Some private yards with elevation changes and large trees. Some old Black Locust in right-of-way with great character form and trunk. Few sidewalks and curbs near intersection. South of Bothell Way there are Lombardy Poplars near right-of-way or private, many in poor condition and severely topped for utility lines. Further south there are sidewalks along curbs. Right-of-way unknown. Short sidewalks in places. Cypress grow under power lines along sidewalk, halfway up hill, then planting becomes native growth to Juanita Drive.

Tree Species	Sizes	Condition	Comments
Lombardy poplars	varies	—	—
Leyland cypress	8”–10”	—	—

8. Juanita Drive NE (from 68th Ave. NE to City Limit)

Approximate Length:	.9 miles
Planting Spaces:	Few planting spaces.
Site Observations:	Short sidewalks along curbs. Native growth areas along much of both sides. Large native trees providing a densely forested setting. No or few sidewalks. Tree planting should consider shade tolerant or understory species.

Tree Species	Sizes	Condition	Comments
—	—	—	—

9. NE 185th Street (from 68th Ave. NE to it's dead end)

Approximate Length:	.35 miles
Planting Spaces:	Street trees possible under power lines in planting strip next to sidewalks.
Site Observations:	Sidewalks part of south side under utilities lines, otherwise no curbs or sidewalks. Large native and ornamental trees near edges on private property.

Tree Species	Sizes	Condition	Comments
—	—	—	—

10. NE 204th Street (from City Limit to 73rd Ave. NE)

Approximate Length:	.2 miles
Planting Spaces:	Short length of sidewalk, south of Carter Rd. with 5' planting strip but flowering cherries already planted on outside of sidewalk.
Site Observations:	Mostly no curbs or sidewalks in this area. There are many large native and ornamental trees on private property throughout this area.

Tree Species	Sizes	Condition	Comments
—	—	—	—

11. 73rd Avenue NE (from NE 204th St. to Bothell Way)

Approximate Length: 1.0 miles

Planting Spaces: —

Site Observations: No curbs or sidewalks. Native and ornamental trees on private property. Red Maple on portion (central) along sidewalks. Many lifting sidewalk and growing too close to sidewalk. Need uplift pruning. Red Maple are mostly under utility lines and have poor form.
Green Ash along edge of sidewalk growing into utility lines on both sides.

Tree Species	Sizes	Condition	Comments
Red maples	6”–12”	Fine.	> 50. Need root pruning to prevent uplift.
Green ash	5”–8”	Poor form.	Approx. 40. Have been topped and tipped. Green Ash need corrective pruning or replacement.

12. NE 192nd Street (from 73rd Ave. NE to 80th Ave. NE)

Approximate Length:	.4 miles
Planting Spaces:	No room for street trees on west end considering all the existing private property trees.
Site Observations:	Red Maple are planted outside of sidewalk near intersection. Many Native and ornamental trees in private yards. Some sidewalks.

Tree Species	Sizes	Condition	Comments
Red maples	6”–12”	—	—

13. 80th Avenue NE (from City Limit to Bothell Way)

Approximate Length:	1.4 miles
Planting Spaces:	Not much room for street trees.
Site Observations:	No curb or sidewalks. Near the newest development, Red and Norway Maples have been planted under utility lines. These species will cause future conflicts with the utility lines.

Tree Species	Sizes	Condition	Comments
Red maples	2”–4”	—	—
Norway maples	2”–4”	—	—

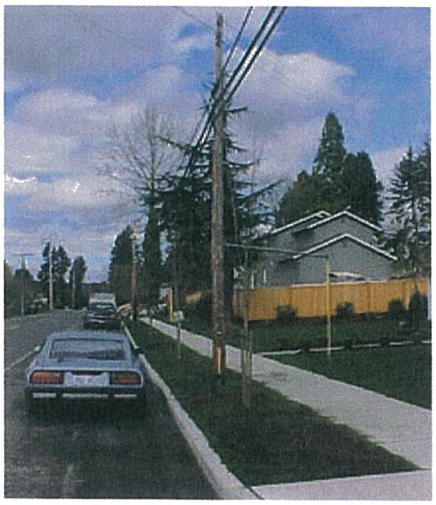

14. 83rd Place NE (from City Limit to Bothell Way)

Approximate Length:	.25 miles
Planting Spaces:	Very limited space for future trees given the elevation and existing vegetation.
Site Observations:	Limited sidewalk and curb. Native and ornamental trees along edges.

Tree Species	Sizes	Condition	Comments
—	—	—	—

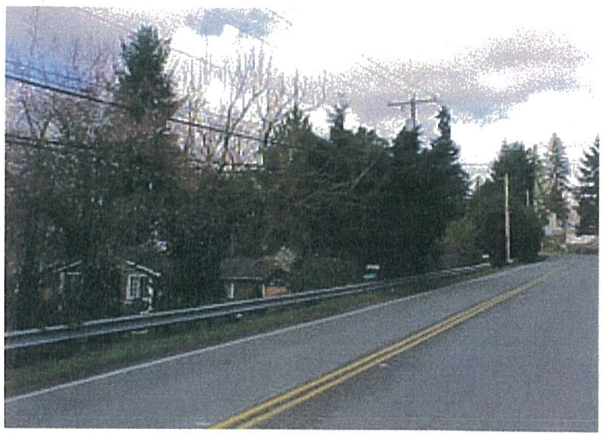

15. NE 182nd Street (from 68th Ave. NE to 73rd Ave. NE)

Approximate Length:	.3 miles
Planting Spaces:	Apparently this is a narrow right-of-way with future limited planting spaces.
Site Observations:	New development has installed new sidewalks and adequate street trees on their property. Most of street has no sidewalk or curb. There are also many large native trees on private property along the edge of the right-of-way.

Tree Species	Sizes	Condition	Comments
Katsura	6”–10”	—	—
Red maples	4”–8”	—	—
Green ash	4”–8”	—	—

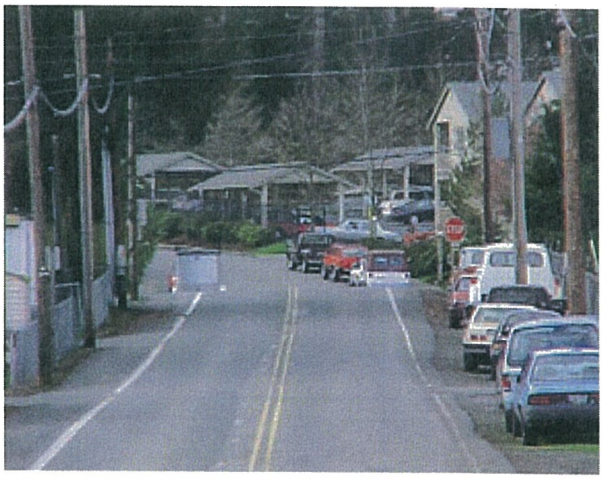

16. NE 181st Street (from 68th Ave. NE to 73rd Ave. NE)

Approximate Length:	.3 miles
Planting Spaces:	Some planting space available for about 6 trees on east end. Tree spaces could be available after more curbs and sidewalks are constructed.
Site Observations:	Limited curb and sidewalks with few street trees. Honey Locust planted near sidewalks on private property. Existing street trees are 2 Green Ash but little else. There are some very large Giant Sequoias on private property with nearby excavation work. This could possibly create a potential hazard.

Tree Species	Sizes	Condition	Comments
Honey locust	—	—	—
Green ash	—	—	—

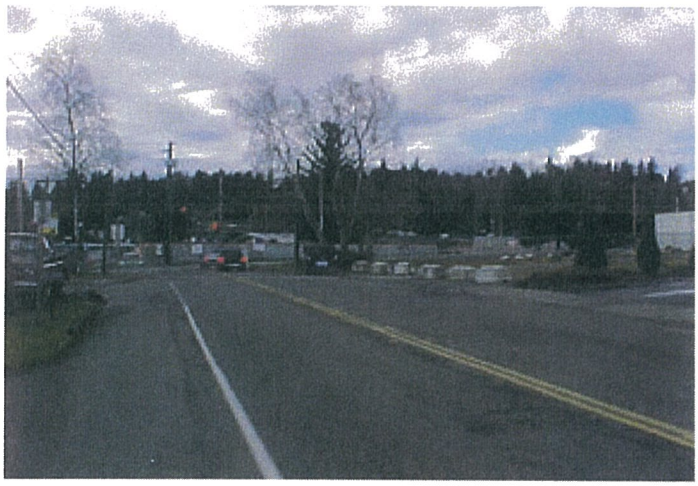

17. NE 181st Street (from 68th Ave. NE to 65th Ave. NE)

Approximate Length: .2 miles

Planting Spaces: —

Site Observations: Sidewalks next to curb so right-of-way is probably limited. There are some street trees in private (commercial) landscape buffers, mostly European Birch, Hawthorn, Sweet Gums, & London Planes. Poor to fair condition.
Evidence of poor soils limiting their potential. The few larger trees were probably existing before the development.

Tree Species	Sizes	Condition	Comments
European birch	8”–12”	—	—
Hawthorn	6”–8”	—	—
Sweet gum	2”–4”	—	—
London plane	18”–26”	—	—

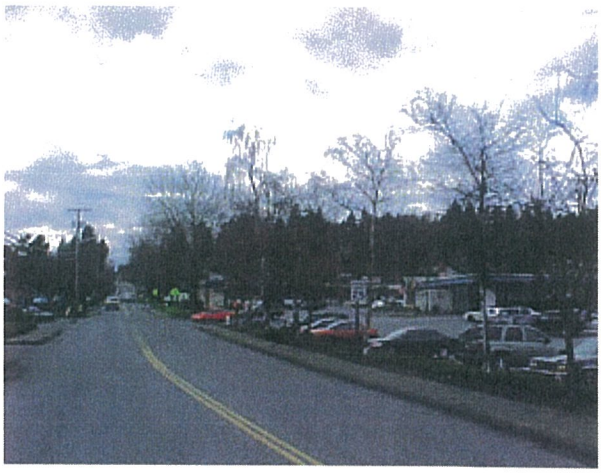

18. 65th Avenue NE (from NE 181st Street to Bothell Way)

Approximate Length: .06 miles (300 feet)

Planting Spaces: There is planting space in landscape buffer.

Site Observations: Short segments of sidewalks next to curb. Street trees in commercial landscape buffer.

Tree Species	Sizes	Condition	Comments
Red maples	12"	Poor structure.	Poor quality of nursery stock.
Hawthorn	—	—	Previously topped.
London plane	very large	—	Heaved and cracked sidewalk and curbs.
Flowering plum	—	—	Low limbs-clearance difficulty.

19. 67th Avenue NE (from NE 181st Street to Bothell Way)

Approximate Length: .06 miles (300 feet)

Planting Spaces: Planting space could be made available.

Site Observations: No curbs or sidewalks. This is a heavy commercial area with intermittent planters and parking spaces. Could use a redesign with enhanced pedestrian flow and tree planting.

Tree Species	Sizes	Condition	Comments
London plane	18"–24"	—	Attractive specimens.

20. NE 175th Street (approx. from 67th Ave. NE to 73rd Ave. NE)

Approximate Length: .4 miles

Planting Spaces: —

Site Observations: No curbs or sidewalks. This is a heavy commercial and industrial area with fences, buildings and vacant lots. Limited landscape on private property because of heavy parking and impervious surfaces for access.

Tree Species	Sizes	Condition	Comments
—	—	—	—

21. NE 170th Street (from 68th Ave. NE to Simonds Rd. NE)

Approximate Length: .8 miles

Planting Spaces: There is no room for street trees and little use for them at this time given the large trees on both sides of the street.

Site Observations: Sidewalks along curbs with significant large native and ornamental trees in private property. Maples (2) next to the west intersection (street trees) but no more after that.

Tree Species	Sizes	Condition	Comments
Maple (Norway?)	8"–12"	—	—

22. Simonds Road NE (from NE 170th St. to City Limit)

Approximate Length:	1.3 miles
Planting Spaces:	There are no planting spaces and large native and ornamental trees line the right-of-way.
Site Observations:	Sidewalk next to curbs in some areas with native and ornamental mature landscape along right-of-way in yards and properties.

Tree Species	Sizes	Condition	Comments
—	—	—	—

23. NE 155th Place (from Juanita Drive NE to Simonds Rd. NE)

Approximate Length:	1.2 miles
Planting Spaces:	No planting spaces on east end. 4' planting strip from 84th to 76th.
Site Observations:	On the east end the shoulders are used as sidewalks, separated by extruded curbs. Large native and ornamental trees on private property. The 84th west to 76th planting strip between curb and sidewalk has many Chanticleer Pears. Some are under large conifers which compete, otherwise this is a good street tree. Flowering pear plantings continue from 76th to Juanita Drive.

Tree Species	Sizes	Condition	Comments
Chanticleer Pears	2"–3"	Mostly good	> 100

24. 84th Ave. NE (from Simonds Rd. NE to City Limit)

Approximate Length:	.8 miles
Planting Spaces:	No planting spaces on east end. 4' planting strip from 84th to 76th.
Site Observations:	Some shoulder use as sidewalk with extruded curb, separating people from traffic. Otherwise, there are no curbs and sidewalks. Significant native and ornamental trees in private landscapes. New sidewalk next to curb near new development. Norway maples planted as part of private landscape act as street trees.

Tree Species	Sizes	Condition	Comments
Norway maples	—	—	Approx. 10.

STREET TREE PLAN 2004-2010

Street Tree Plan

The skyline of Kenmore is notable for it's distinctive tree-like character. The many mature, existing evergreen and deciduous trees in proximity to the main roadway corridors reinforce this character, of green, wooded corridors, weaving through neighborhoods. After analysis of the main street segments for their street trees (trees in the right-of-way), the results show that most of these trees occur on private property and not in the street right-of-way. As a means of reinforcing and preserving the sense of wooded corridors, various streets have been designated as green streets and as a result from the street tree analysis, various green streets are associated with distinctive planting palettes. The green streets connect open spaces and green space areas. They create friendlier streetscapes by buffering people from the hard edges of roadways. Deciduous street trees help mark the seasons, visually through seasonal displays of color and texture, and viscerally by providing shade in summer and allow the warm rays of sunlight through in the winter. The green streets have been grouped into three main streetscape planting areas: Peripheral, Central, and Downtown, including SR-522.

Peripheral Green Streets

Through the analysis of existing street trees, it became evident that various street segments along the periphery of the city pass through very diverse environmental zones, topography, sun exposure, and levels of development. To address these variable conditions, these peripheral green streets are to be planted with a mix of tree species. This allows for an increase in diversity because each tree along the corridor might be totally different from the tree next to it. The trees can all have different spacing, sizes, and shapes. This pattern allows for a more naturalized appearance of the street tree planting in keeping with the characteristic mix of trees already present throughout Kenmore. In addition, this mixed planting provides enough diverse tree selection options to compliment the particular microclimate of each planting location. To provide for a level of visual consistency, trees should be planted on peripheral green streets that have yellow, orange, or variable fall foliage as indicated in the recommended street tree list (see Table 3). In addition, tree should be selected according to site conditions, including proximity to utility lines. Spacing between different size trees should be calculated by adding the spacing requirements between each species and dividing the answer in half (taking the average). Example: the distance between a Red maple (large tree) and Amur maple (small tree) is calculated: 30 feet + 20 feet = 50 feet ÷ 2 = 25 feet. The distance between these two different size trees should be 25 feet.

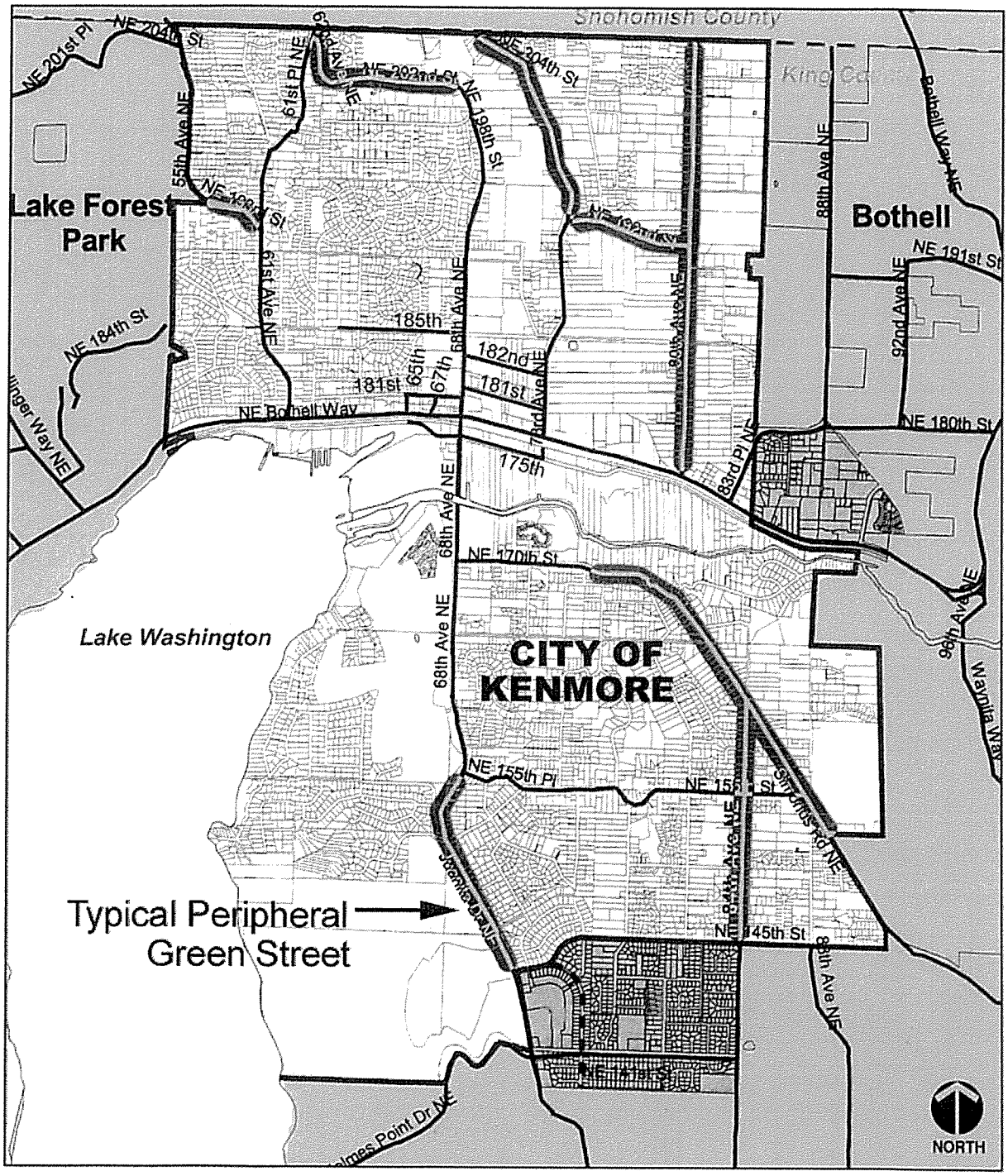

Figure 2. Peripheral Green Streets (Highlighted)
The following street corridors have been designated as peripheral green streets:

- NE. 193rd Street (from 61st to City Limit)
- 62nd Avenue NE (from 61st to 202nd)
- NE 202nd Street (from 62nd to 198th)
- 80th Avenue NE (from SR-522 to City Limits)
- NE 192nd Street (between 80th and 73rd)
- 73rd Avenue NE & 204th (from 192nd north to City Limits)
- Juanita Drive NE (from 155th to City Limits)
- 84th Avenue NE (from Simonds Ave to City Limits)
- Simonds Avenue NE (from 75th to City Limits)

Central Green Streets

The green streets in this planting concept represent those streets that have a more uniform environment along their length or already have an existing sequence of trees. These street segments are also closer to but outside the downtown core area and represent a transition from the periphery to the downtown (see Figure 3). The central green streets will have a limited palette of tree species planted along the corridor (see Table 1). This limited palette allows for a few different species and varieties of trees as long as they are similar in size, form, and autumnal color. Allowing for a few types of trees maintains a feeling of unity, while also providing a few options for planting in areas where utility lines are present. Ideally, all the trees are all planted along these sections at the same time. This lowers the maintenance requirements considerably because maintenance would be approximately the same on each tree. The general uniformity of the trees provides a visual effect of harmony and aesthetic compatibility which signifies that the uses behind the trees are consistent along the corridor.

Table 1 .Tree designations for Central Green Streets

CENTRAL GREEN STREET	TREES
61st Avenue NE	Maple varieties (*Acer* var.), Zelkova varieties (*Zelkova serrata* var.)
NE 185th Street	Serviceberry varieties (*Amelanchier x grandiflora* var.), American hornbeam (*Carpinus carolinianna*)
68th Avenue NE (north of 182nd to 202nd Street)	Red maple varieties (*Acer rubrum* var.), Amur maple (*Acer ginnala*), Paperbark maple (*Acer griseum*)
73rd Avenue NE (between 182nd and 192nd)	Accolade Elm *(Ulmus japonica* x *wilsoniana* 'Morton'), Japanese hornbeam (*Carpinus japonica*)
68th Avenue NE (south of Bothell Way to Juanita Drive)	Hawthorn species and varieties (*Crataegus sp.* and var.), Japanese hornbeam (*Carpinus japonica*),
NE 170th Street	Conelian Cherry Dogwood (*Cornus mas* var.), Serviceberry varieties (*Amelanchier x grandiflora* var.)
NE 155th Place & NE 155th Street	Chanticleer pears (*Pyrus calleryana* 'Chanticleer'), Flowering pear varieties (*Pyrus calleryana* var.)

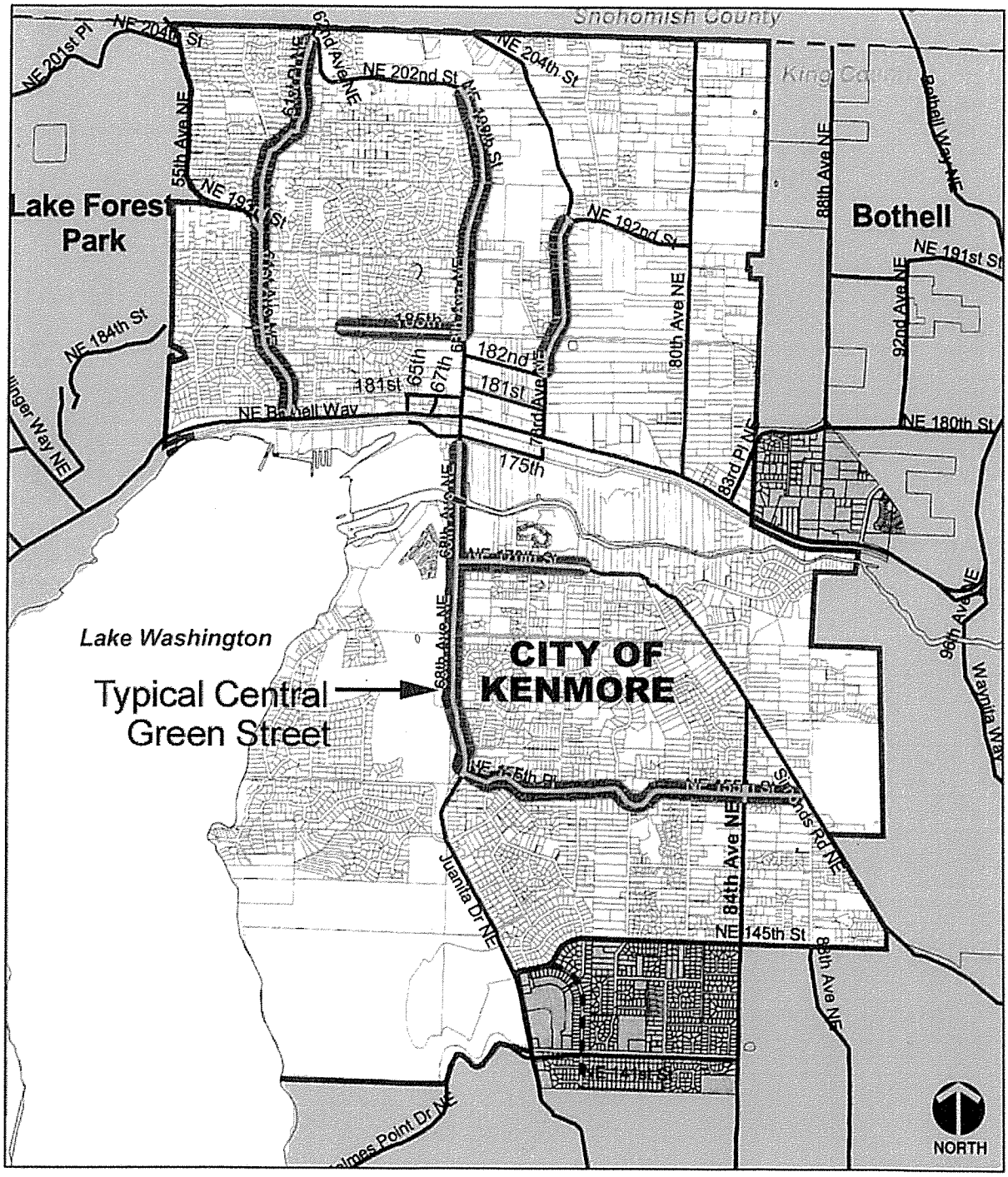

Figure 3. Central Green Streets (Highlighted)

Downtown Green Streets & SR-522

Due to their distinctive locations and requirement from the Kenmore Downtown Plan to have a unique identity, the downtown green streets and SR-522 (NE Bothell Way) have much more formal and strict tree designations (see Figure 4 and Table 2). This provides for feeling of unity and harmony, signifying consistent zones and districts in the downtown.

Table 2. Tree Designations for Downtown Green Streets and SR-522

DOWNTOWN GREEN STREET & SR-522	TREES
NE 182nd Street (btwn 68th to 73rd)	Chanticleer pears (*Pyrus calleryana* 'Chanticleer')
NE 181st Street (btwn 68th to 73rd)	Chanticleer pears (*Pyrus calleryana* 'Chanticleer')
NE 175th Street (btwn 65th to 73rd) and 68th Ave. NE & 73rd Ave, NE south of SR-522 connecting to NE 175th	Zelkova varieties (*Zelkova serrata* var.)
68th Avenue NE (from SR-522 to 185th)	Chanticleer pears (*Pyrus calleryana* 'Chanticleer')
65th Avenue NE (from 181st to SR-522)	Raywood Ash *(Fraxinus oxycarpa* 'Raywood')
67th Avenue NE (from 181st to SR-522)	Raywood Ash *(Fraxinus oxycarpa* 'Raywood')
73rd Avenue NE (from SR-522 to 182nd)	Chanticleer pears (*Pyrus calleryana* 'Chanticleer')
NE 181st Street (from 65th to 73rd)	Raywood Ash (*Fraxinus oxycarpa* 'Raywood')
SR-522 (NE Bothell Way, btwn city limits)	Red maple varieties (*Acer rubrum* var.).

Alternate Trees

Alternative species may be substituted, although this should be discouraged in the downtown area. Alternative species should demonstrate the same characteristics such as rate of growth, form, size, leaf texture, and root spread. Trees listed in Table 4. Not Recommended for Street Trees should not be allowed as alternate trees. Departures from the required street tree species shall require the approval of the director of community development.

Single-family subdivisions and short subdivisions

Street trees planted in single-family subdivisions and short subdivisions should also be of a type determined on their location. If the primary entrance to the subdivision is off of a designated green street, then the tree types and planting scheme should follow the same scheme as the designated green street. If the primary entrance is not off of a designated green street, the street tree types and planting scheme should follow that of peripheral green streets (see above). For subdivisions having multiple entrances, the primary entrance for the purposes of this plan shall be the one on a designated green street. If the multiple entrances occur on different green streets, then any entrance off of a green street may be designated as the primary entrance for the subdivision. For instance if a subdivision had it's primary entrance off of NE 192nd, then the required street trees should follow the peripheral green street, tree type and layout.

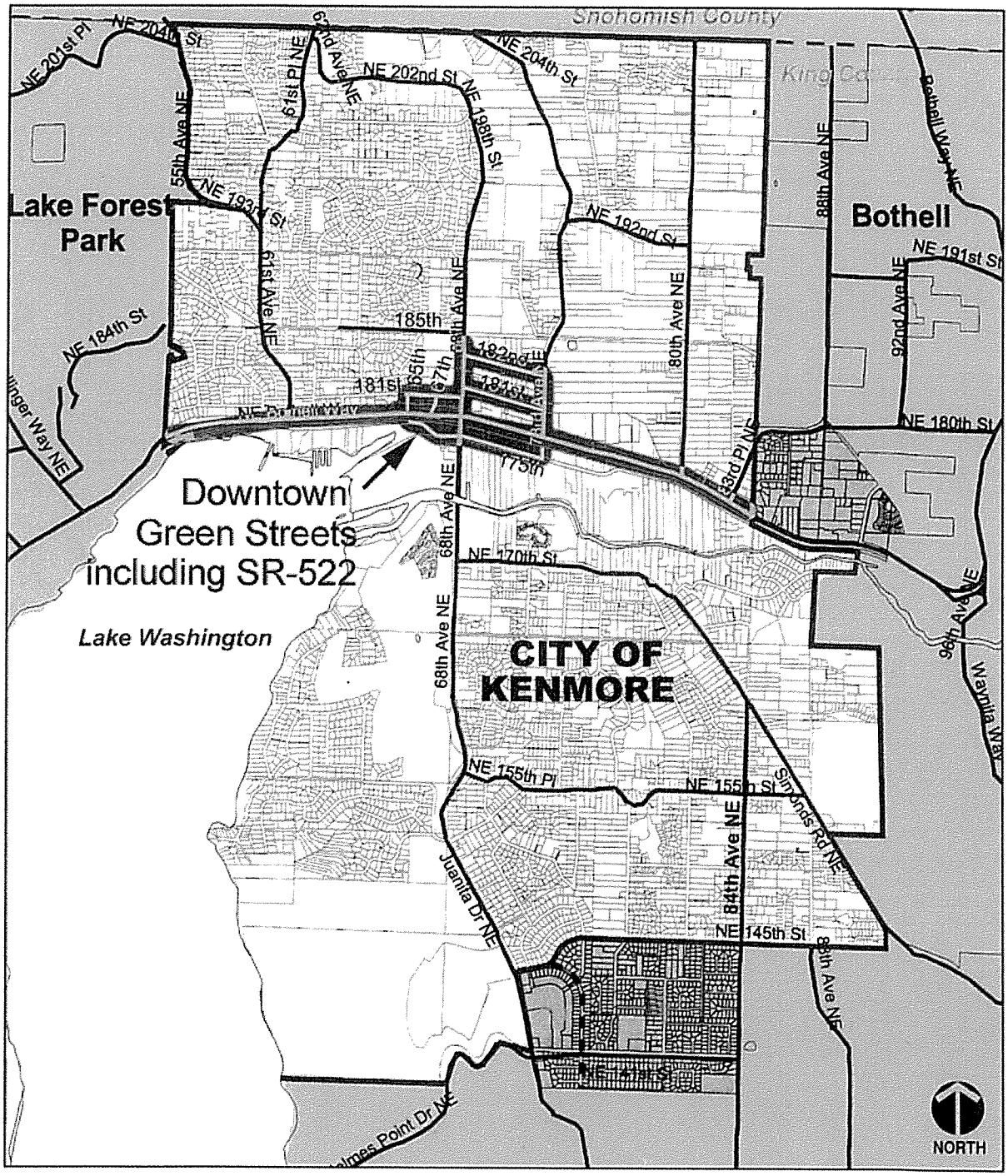

Figure 4. Downtown Green Streets & SR-522 (Highlighted)

STREET TREE LISTS

The following street tree lists include the main tree species recommended for Kenmore in each size category. Where multiple, commercially available varieties for a species exist, the word "varieties" has been added to the species name. Where multiple species are available that meet the same requirements, the word "species" has been added. The lists include these terms in a general manor to offer maximum flexibility, since new varieties are constantly being developed and introduced into the market. It should be remembered that when tree selections are being made from these lists, consideration must be given to any environmental conditions at any specific location so that the best suited trees are used (soils, microclimate, drainage, pH hydrology, land use etc.). The specific site should be examined to determine the area available for future growth and any unrecorded restrictions which might affect the long-term health of tree. The street tree lists should be updated periodically by the city's consulting arborist. New, suitable trees should be added as they appear and are tested and old ones removed if they prove to cause problems.

Table 3. Recommended Trees

Recommended small/narrow deciduous trees (min. spacing 20')		**Autumn Color**
Acer buergeranum	Trident Maple	Orange to Red
**Acer ginnala*	Amur Maple	Red
**Acer griseum*	Paperbark Maple	Red
Acer rubrum - narrow varieties	Red Maple	Orange to Red
Acer saccharum - narrow varieties	Sugar Maple	Yellow to Orange
Acer tartaricum	Tatarian maple	Yellow to Red
**Amelanchier* varieties	Serviceberry	Red (variable)
Carpinus japonicus	Japanese hornbeam	Yellow to Red
Cornus 'Eddies White Wonder'	White Wonder Dogwood	Red
**Cornus mas*	Conelian Cherry Dogwood	Yellow to Red (variable)
Prunus varieties - nonfruiting	Cherry (flowering types)	Orange to Red
Pyrus calleryana 'Chanticleer'	Chanticleer Pear	Red
**Malus* varieties - nonfruiting	Crab apple	Yellow
**Zelkova serrata* varieties	Zelkova	Yellow to Red (variable)
Recommended medium deciduous trees (min. spacing 25')		**Autumn Color**
**Acer davidii*	David's maple	Yellow to Red (variable)
Acer rubrum varieties	Red maple	Orange to Red
**Carpinus japonica*	Japanese hornbeam	Yellow
Cercidiphyllum japonicum	Katsura Tree	Yellow
Fraxinus oxycarpa 'Raywood'	Raywood Ash	Red
Fraxinus pennsylvanica varieties	Green ash	Yellow
Parrotia persica	Parrotia	Yellow to Red (variable)
Ostrya virginiana	American Hophornbeam	Yellow
Ulmus japonica x *wilsoniana* 'Morton'	Accolade Elm	Yellow
Zelkova serrata varieties	Zelkova	Yellow to Red (variable)
** Puget Sound Energy recommendation for planting near utility lines*		

Recommended large deciduous trees (min. spacing 30')		**Autumn Color**
Acer rubrum varieties	Red maple	Orange to Red
Acer platanoides varieties	Norway maple	Yellow to Orange
Fagus sylvatica varieties	Beech	Red to Purple
Ginko biloba varieties - males only	Ginkgo	Yellow
Liquidambar styraciflua	Sweet Gum	Orange to Red
Liriodendron tulipifera	Tulip tree	Yellow
Quercus rubra	Red oaks	Red
Tilia species	Lindens	Yellow

The following list are trees that are not recommended to be planted as street trees in Kenmore. These trees exhibit weak wood, are prone to insects or diseases, cause sidewalk or sewer line problems, have invasive seedlings or roots, and/or cause a problem with pollen, fruits, or nuts. In addition, evergreen trees in general are not recommended as street trees due to problems with visibility, low branching height, and shading during winter months.

Table 4. Not Recommended as Street Trees

Acer macrophyllum	Big Leaf Maple
Acer negundo	Box Elder
Acer saccharinum	Silver Maple
Ailanthus altissima	Tree of Heaven
Alnus species	Alder
Betula papyrifera	White birch
Catalpa species	Catalpa
Celtis occidentalis	Hackberry
Fraxinus velutina glabra	Modesto Ash
Ginkgo biloba (female trees)	Ginkgo (female trees)
Juglans nigra	Black Walnut
Morus species	Mulberry
Populus balsamifera	Black Cottonwood
Populus deltoides	Cottonwood
Populus nigra 'Italica'	Lombardy Poplar
Populus tremuloides	Quaking Aspen
Prunus species (fruiting types)	Cherries (fruiting types)
Pyrus species (fruiting types)	Pears (fruiting types)
Rhus species	Sumac
Robinia pseudoacacia	Black Locust
Ulmus americana	American Elm
Ulmus pumila	Siberian Elm
Salix species	Willow

MANAGEMENT PLAN

City's consulting arborist (Tree care professional)

The city's consulting arborist shall be a qualified tree protection professional (Kenmore Land Use Code 18.--.020.15). The consulting arborist shall have the care and control of all public trees in the street right-of-way and public open spaces. The consulting arborist will have the charge of supervision and inspection of planting methods, maintenance, felling, pruning, and bracing of trees, will evaluate sites in the right-of-way for planting, will update the street tree plan and lists for city approval and use, and will represent the interests of trees to other branches of city government.

PLANTING AND PERFORMANCE STANDARDS

Planting procedures should follow current accepted arboricultural standards. Once the tree is planted, all other maintenance will be controlled by the Street Tree Plan and the professional judgement of the city's consulting arborist.

Planting Strip and Sidewalk Considerations

Competition for underground growing space is a concern in areas where pavement and underground utilities take increasingly large amounts of room. Correct street tree planting methods offer the best solution to street tree survival. To avoid future conflicts between roots and sidewalks the relationship between planting space and tree size should be considered. A potentially large tree should not be planted in a small planting strip. Generally, trees that have a mature height of less than 20 feet can do well in a planting strip that is 30 inches wide. Trees between 20 and 30 feet require a minimum width of 30 to 48 inches. Trees greater than 30 feet at maturity require a planting strip width greater than 48 inches.

In Downtown Commercial and Downtown Residential zones streets trees are to be located within the 4' space between the curb and the walking space of the sidewalk as provided for in the Kenmore Downtown Plan. This would be adequate space for the planting of small and medium sized trees, though large trees should not be planted unless additional space for root growth is provided. In these areas, tree pits within sidewalks should be a minimum length of 4', resulting in a minimum 4' x 4' overall size for street tree planting pit and tree grate.

Additionally, the use of root paths or root channels should be considered to help alleviate future root conflicts with the sidewalk. Root paths provide a spider web network that direct roots under paving and into more favorable areas for air, water, and nutrients. This technique is most effective when large areas of lawn or planting beds exist on the back side of the sidewalk (see Planting Exhibits in Appendix B).

Planting Standards

1. Trees should be planted between October 15 and December 15 and between April 1 and May 15 (Autumn and Spring planting). However with high-quality trees and trained people doing the planting, trees may be planted any appropriate time of the year.
2. Plant materials shall conform to the latest version of the American Standard for Nursery Stock (1996 Edition or successor). Plant materials shall be of standard quality or better, true to name and type of their species, cultivar, or variety.
3. Plants shall have normal, well-developed branches and root systems. They shall be healthy, vigorous plants free from defects, decay, sunscald injuries, abrasions of the bark, insect pests, and all forms of infestations or objectionable disfigurements.
4. Bare-rooted trees are be prohibited from planting as street trees.
5. The minimum sizes of plants, straightness of trunk, and clearance of the lower branches shall be specified by the city's consulting arborist.
6. The director of community development or his/her designees (such as the city's consulting arborist) shall be notified and have the right to inspect any trees before they are planted.
7. All street trees shall be chosen consistent with the street tree plan and/or the street tree lists.
8. No plant pit shall be dug or approved until all underground electric, telephone, gas, sewer, or

water line locations have been checked.
9. All tree planting shall meet standard industry methods and techniques.

Planting Standards of Workmanship:
1. Plant materials shall be handled in such a manner as to cause the least possible amount of damage during the planting process. The trunk shall be protected against mechanical impact during handling and transport.
2. Balled-and-burlapped and container-grown plants shall always be handled by the solid ball. Under no circumstances may they be dragged, lifted, or pulled by the trunk or foliage parts in a manner that will loosen the root ball or otherwise damage the tree.
3. In transporting tree to the job site, they shall be handled, secured, or covered so as to prevent any damage from wind or vibration. Trees shall never be thrown, dropped, or bounced off a truck or loader to the ground.
4. Plant materials shall be planted on the day they are taken to the planting site or they shall be watered and placed in a shady and wind-protected area to prevent dehydration until they can be transplanted.
5. Trees shall not be dug, balled-and-burlapped or moved with a tree spade during the active growth period unless the ball is large enough to insure survival, a judgement to be made by the city's consulting arborist.
6. All twine or rope secured around the trunk and branches shall be removed during planting and after planting is completed. Plant labels shall be removed after final approval and acceptance of the work is made by the city.
7. Cleanup of soil, branches, or other debris resulting from the planting of any tree shall be accomplished promptly. The work area shall be kept safe at all times until cleanup operations are completed. Under no condition shall the accumulation of soil, branches, or other debris be allowed upon public property in such a manner as to result in a public hazard or to be unsightly.
8. Excavated plant pits that will be left open when work is not in progress (nights, holidays, and weekends) or which pose hazards at any time to pedestrians or vehicles shall be adequately barricaded with qualified warning devices.

Tree Pruning and Maintenance Standards

All tree pruning and maintenance requirements shall meet standards specified in ANSI A300–Tree, Shrub, and Other Woody Plant Maintenance--Standard Practices (Part 1–Part 4). In addition, the International Society of Arboriculture publishes a series of Best Management Practices booklets that compliment and support the four parts of ANSI A300. The standards explain what to do, while the ISA booklets explain how to do it.These booklets are a working tool that should be used to help meet the standards in ANSI A300.

Tree Replacement Policy

The decision to replace a tree should be made with a judgement of necessity by the city's consulting arborist. The following guideline should be used for this judgement:
Approval for removal of a tree may be granted if one or more of the following applies:

1. If a tree is an imminent hazard to building structures or pavement areas.
2. If the tree is dead.
3. If in the opinion of the consulting arborist, extraordinary conditions exist that warrants removal.

Street trees that show evidence of decline due to species incompatibility to environmental conditions shall be replaced with improved cultivar if available or street tree species better suited to those conditions.

EDUCATIONAL RESOURCES

The International Society of Arboriculture (ISA) created www.treesaregood.com to provide the general public with quality tree care related information. This Web site is an excellent resource for information on specific topics, to answer questions, and to locate an ISA Certified Arborist. The following topics are from a series published by the ISA as part of its Consumer Education Program available on the Web site www.treesaregood.com:

What Your Tree Needs and Why
- *Why Hire an Arborist?*
- *Benefits of Trees*
- *Value of Trees*

Before Tree Buying and Planting
- *Tree Selection*
- *Buying High-quality Trees*
- *Avoiding Tree and Utilities Conflicts*
- *New Tree Planting*

Proper Tree Care Techniques
- *Mature Tree Care*
- *Plant Health Care*
- *Trees and Turf*
- *Proper Mulching Techniques*

Pruning Your Trees
- *Pruning Young Trees*
- *Pruning Mature Trees*

Tree Hazards and Treatments
- *Why Topping Hurts Trees*
- *Insect and Disease Problems*
- *Recognizing Tree Hazards*
- *Avoiding Tree Damage During Construction*
- *Treatment of Trees Damaged by Construction*

These are also available as bruchures and may be purchased from the ISA Web store. For additional information, contact ISA at (217) 355-9411 or isa@isa-arbor.com.

REFERENCES

1) ANSI A300 Tree, Shrub, and Other Woody Plant Maintenance--Standard Practices (Part 1: Pruning, Part 2: Fertilization, Part 3: Support Systems: Cabling, Bracing, and Guying, Part 4: Lightning Protection).

2) American Standard for Nursery Stock (1996 Edition or successor), American Nursery & Landscape Association.

3) Best Management Practices: 1. Pruning, 2. Tree & Shrub Fertilization, 3. Tree Support–Cabling, Bracing, and Guying, 4. Lightning Protection; International Association of Arboriculture.

4) International Society for Arboriculture; www.isa-arbor.com

APPENDIX A:
COPIES OF MAPS

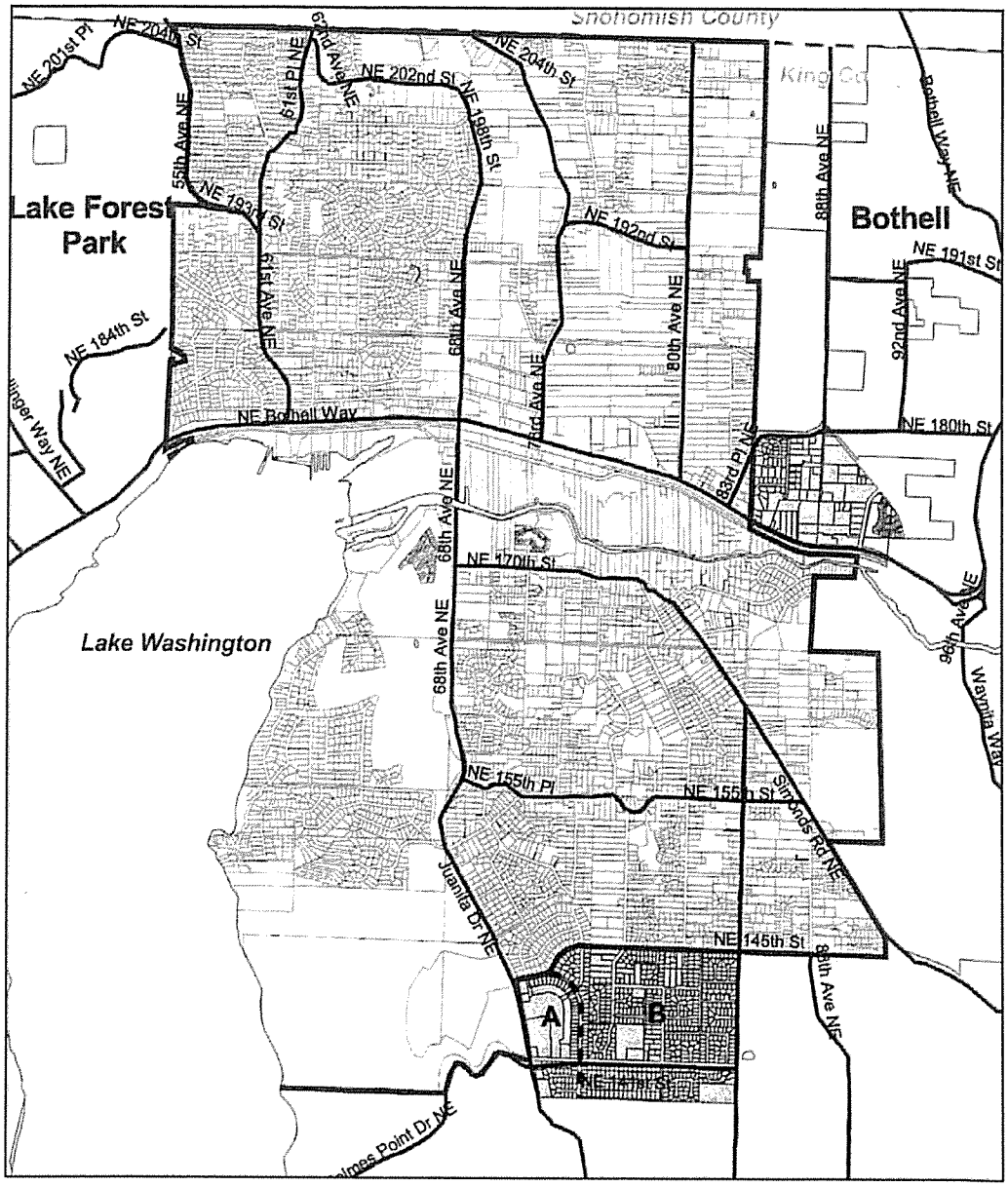

from City of Kenmore Parks and Recreation Master Plan April 2003

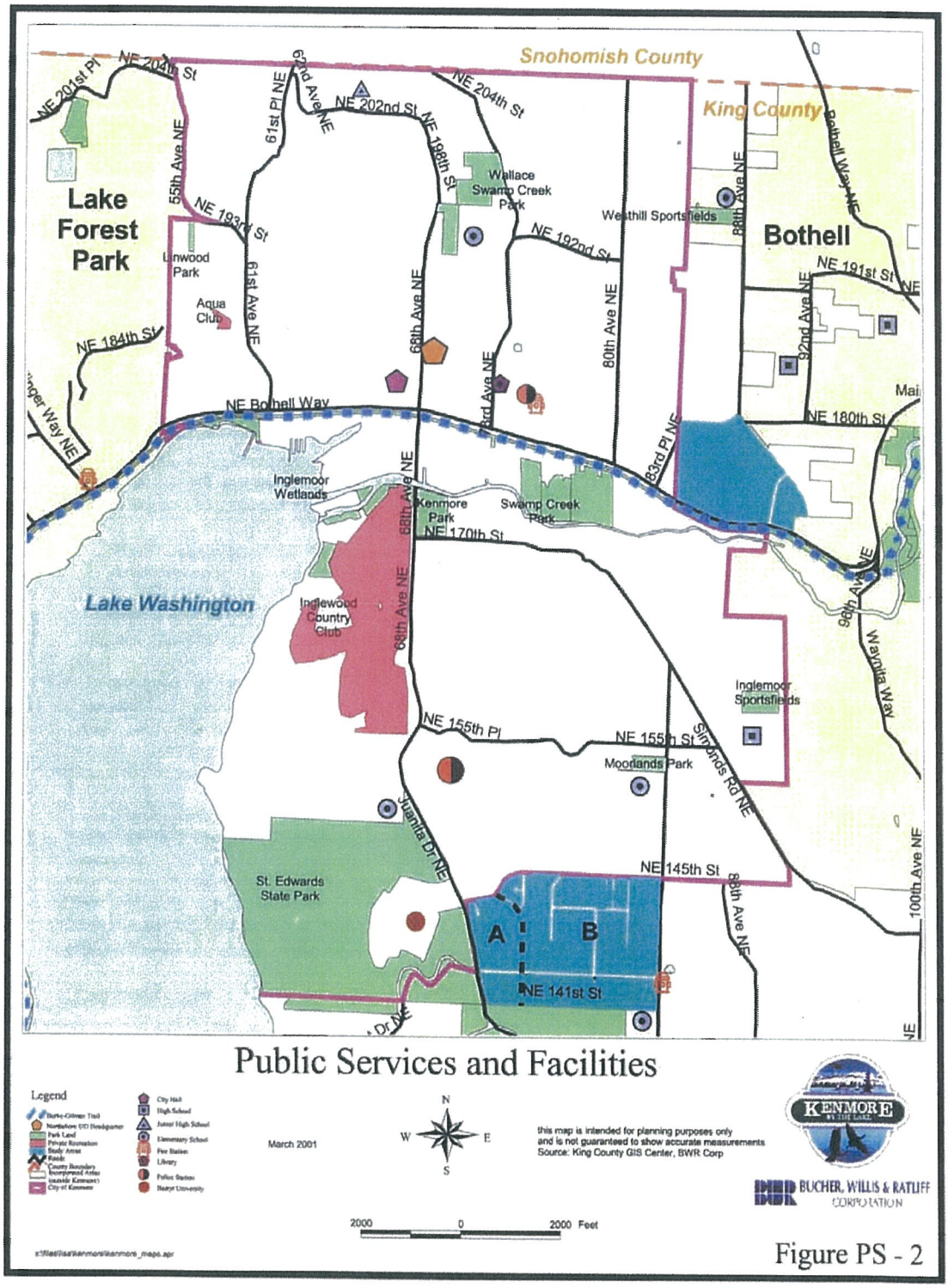

from City of Kenmore Final Integrated Comprehensive Plan and Environmental Impact Statement March 2001

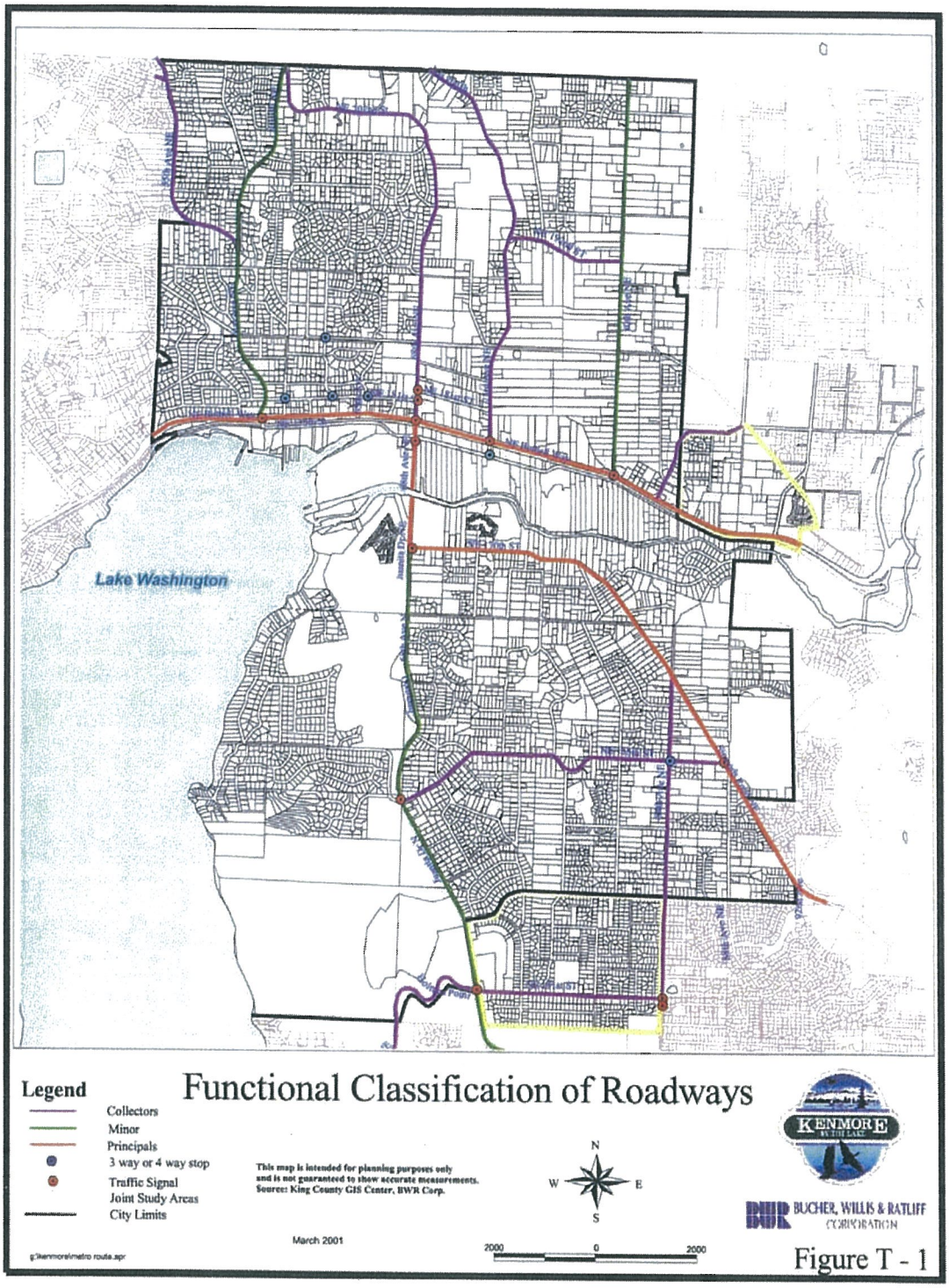

from City of Kenmore Final Integrated Comprehensive Plan and Environmental Impact Statement March 2001

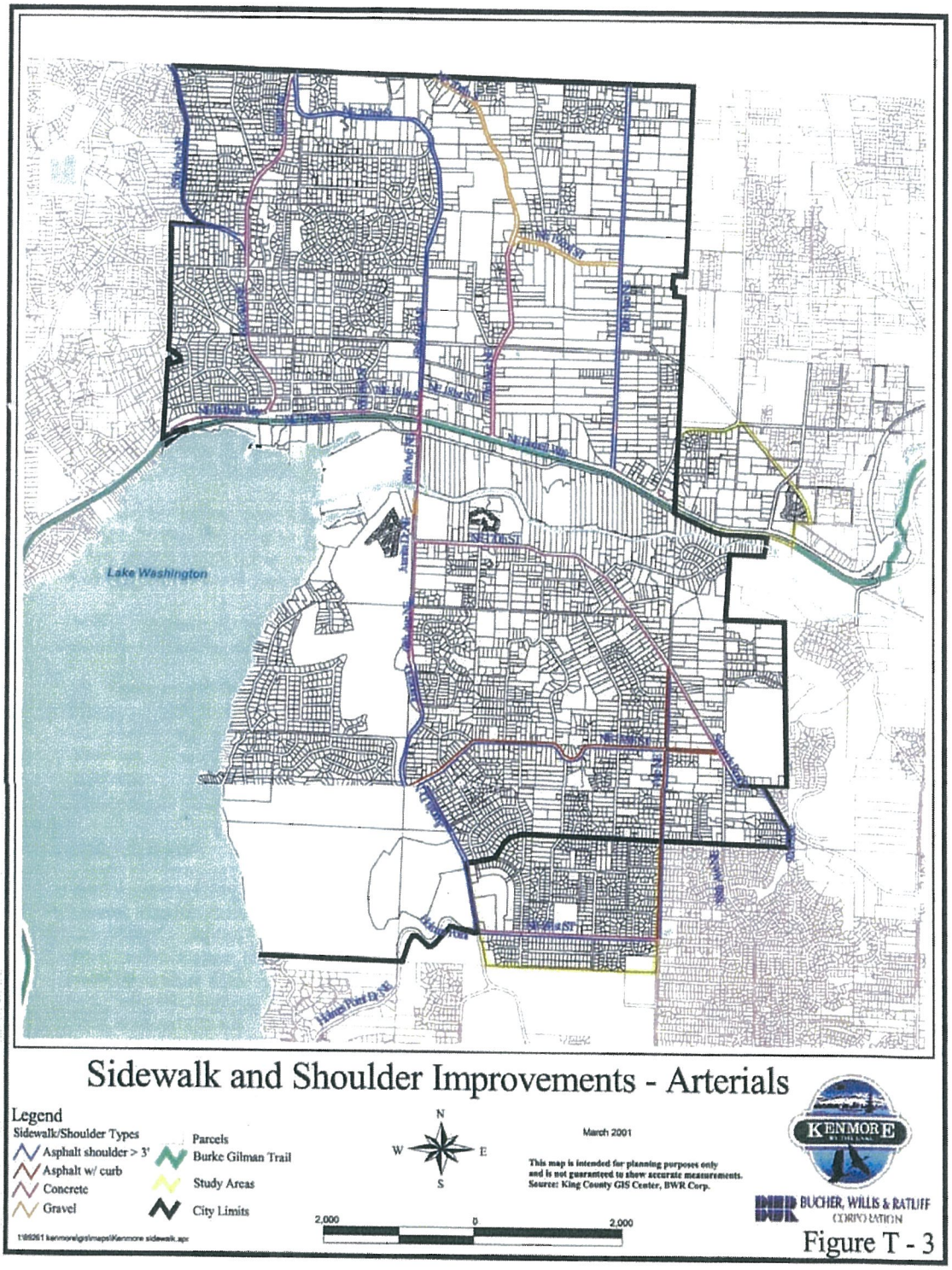

from City of Kenmore Final Integrated Comprehensive Plan and Environmental Impact Statement March 2001

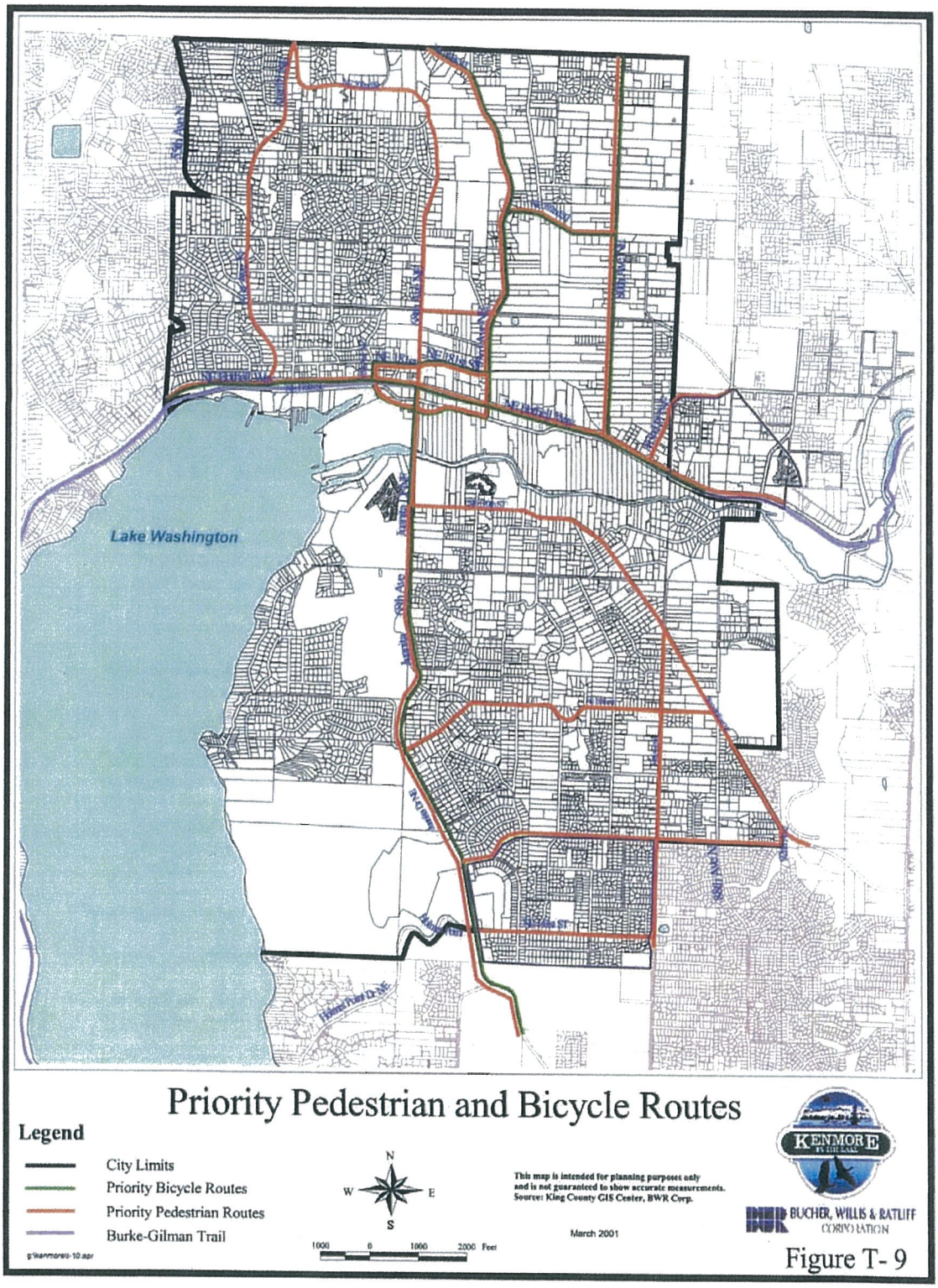

from City of Kenmore Final Integrated Comprehensive Plan and Environmental Impact Statement March 2001

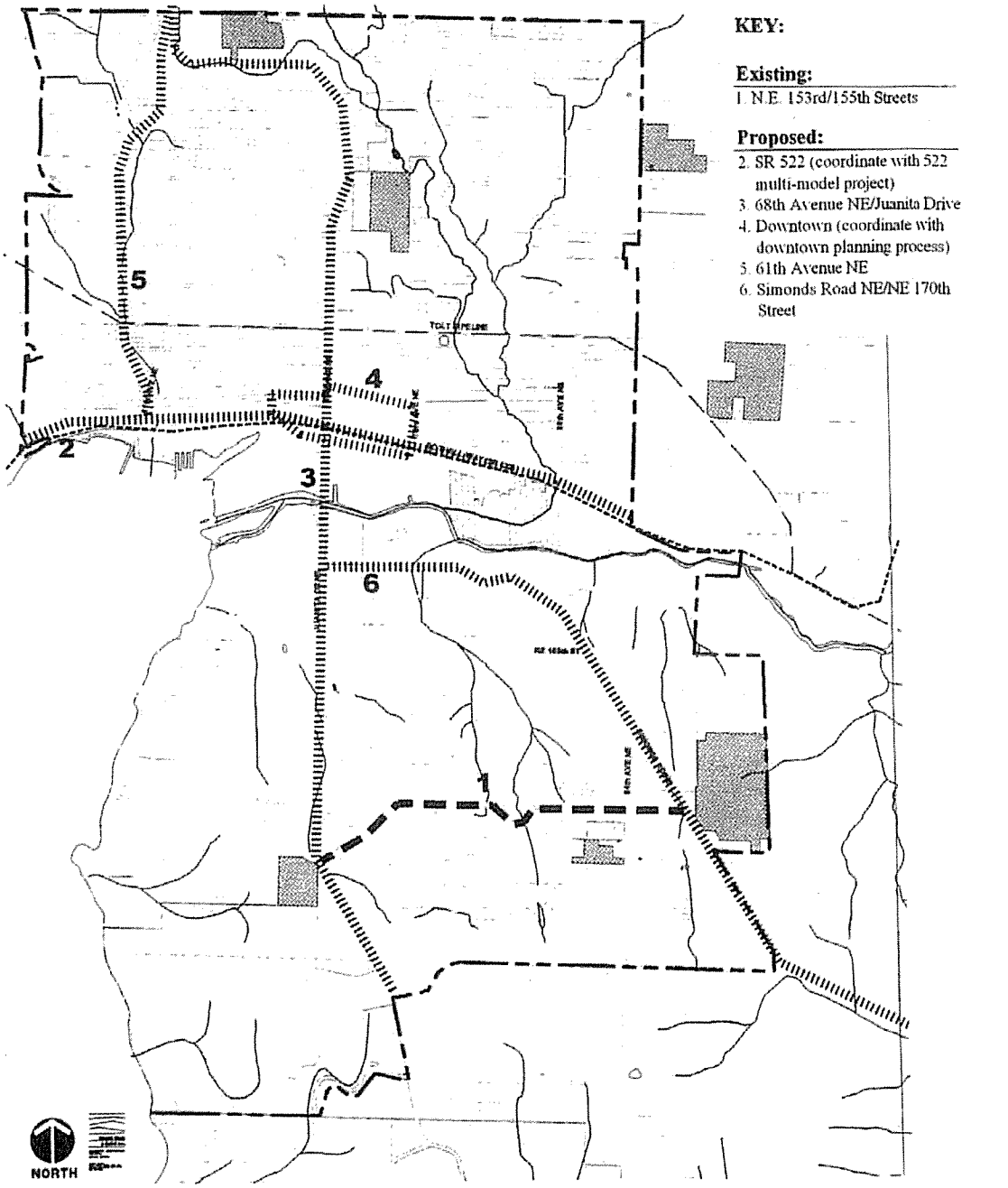

Streetscapes (street trees, lighting, etc.)

Legend

PARKS
PUBLIC SCHOOLS
CITY BOUNDARY
BURKE GILMAN TRAIL
PROPOSED STREETSCAPE
EXISTING STREETSCAPE
EXISTING FACILITY PUBLIC
EXISTING FACILITY PRIVATE

SCALE

102 *5/1/03*

from City of Kenmore Parks and Recreation Master Plan April 2003

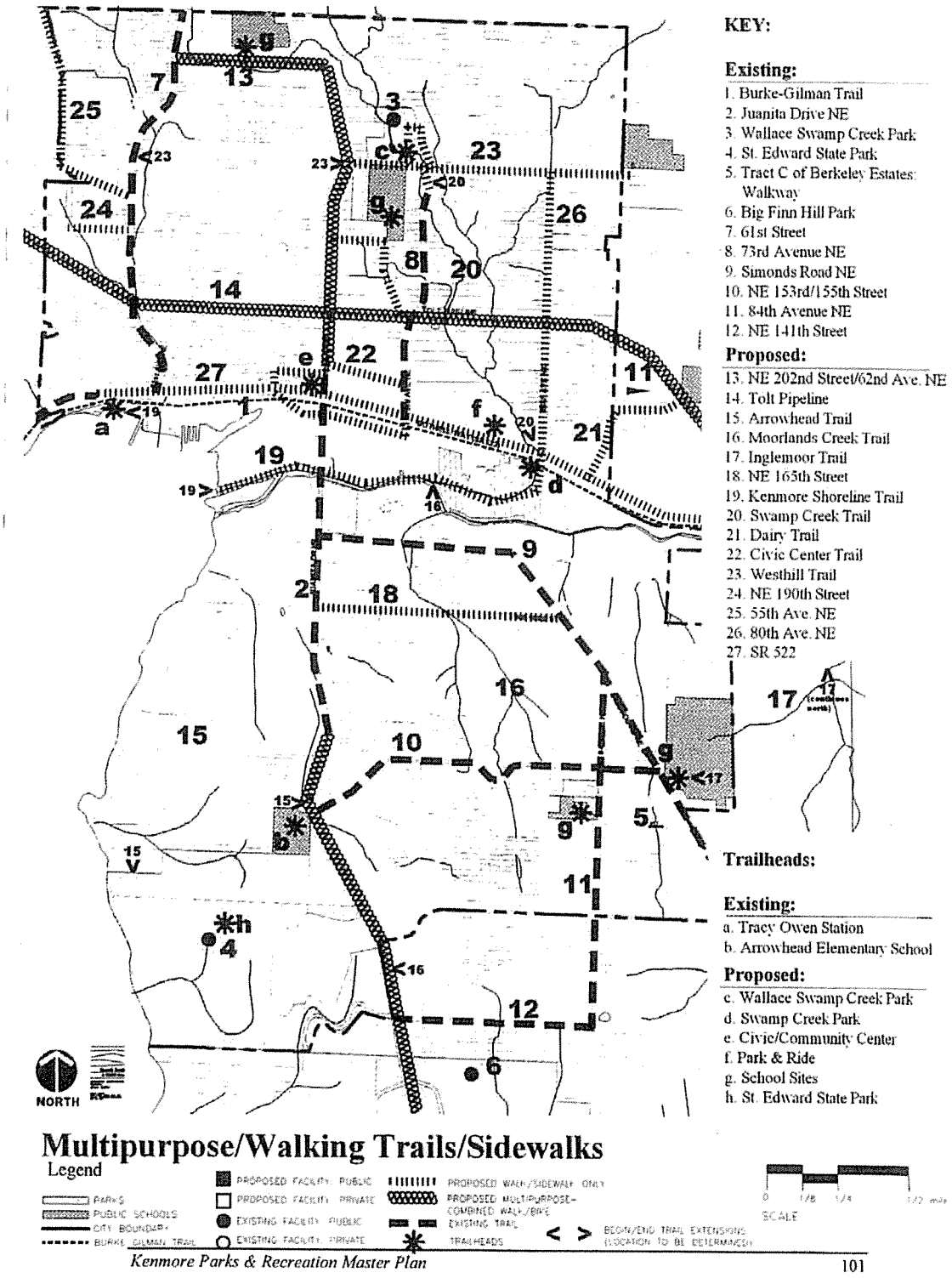

from City of Kenmore Parks and Recreation Master Plan April 2003

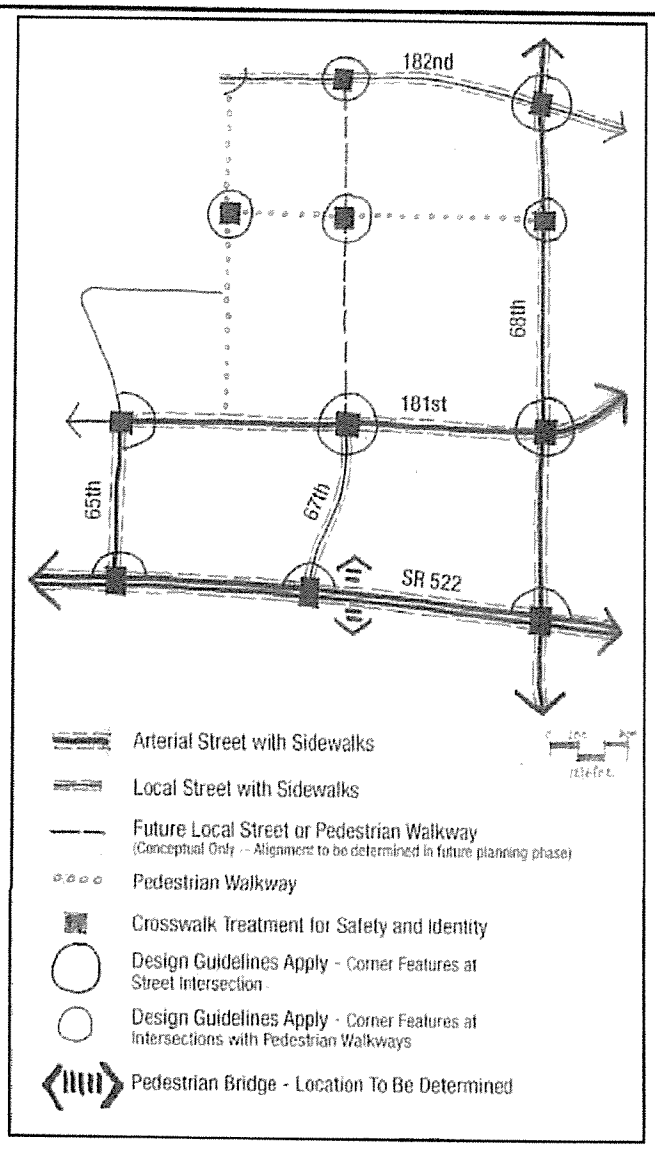

Northwest Quadrant Circulation Plan

This map is intended for planning purposes only and is not guaranteed to show accurate measurement.
Note: Signals at pedestrian crossings will be evaluated on a case-by-case basis.
Source: Arai/Jackson Architects and Planners & Berger/ABAM Engineers

Not to Scale

April 2003

Jones & Stokes

Figure 9

from City of Kenmore Downtown Plan April 2004

APPENDIX B:
PLANTING EXHIBITS

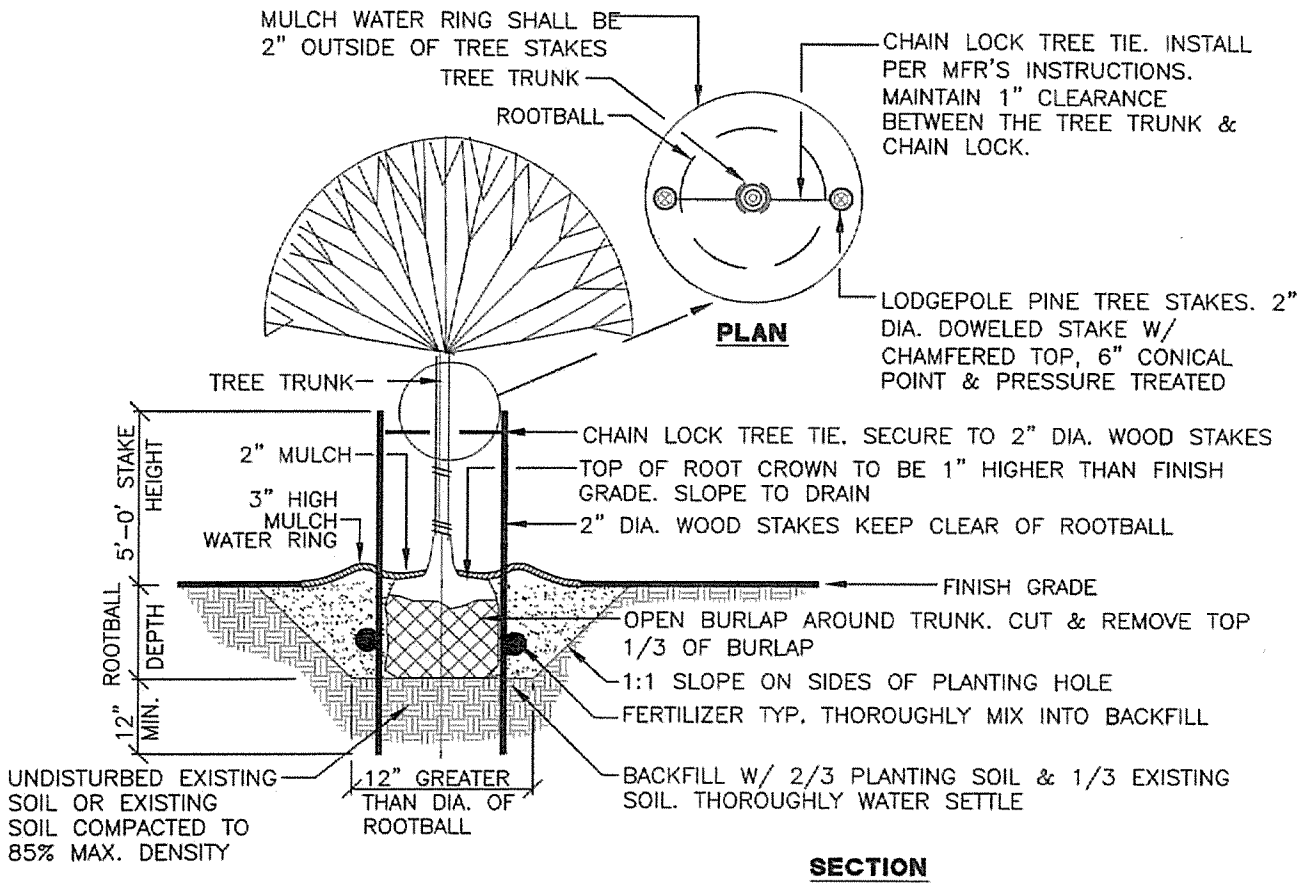

1 DECIDUOUS STREET TREE PLANTING EXHIBIT

NOT TO SCALE

Use for planting trees back of sidewalk

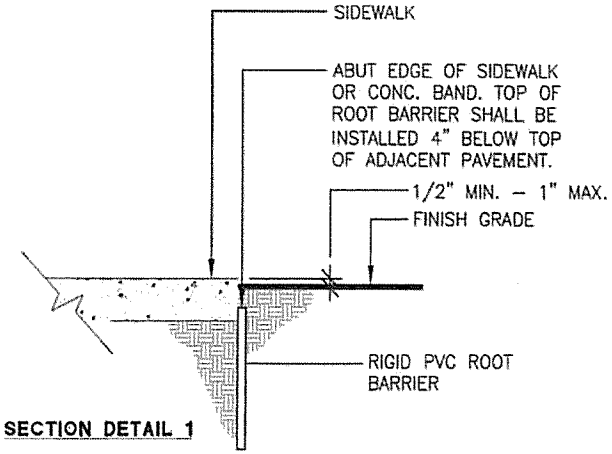

SECTION DETAIL 1

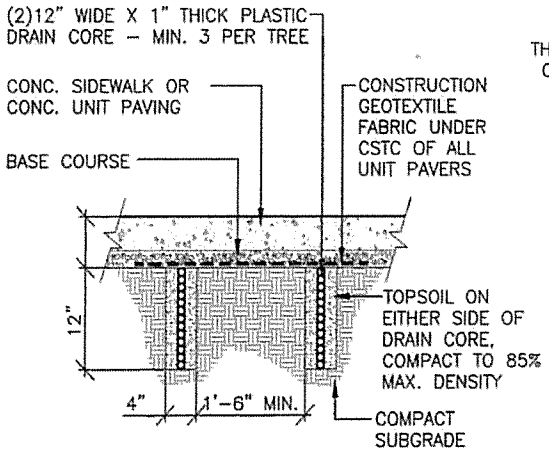

SECTION DETAIL 2

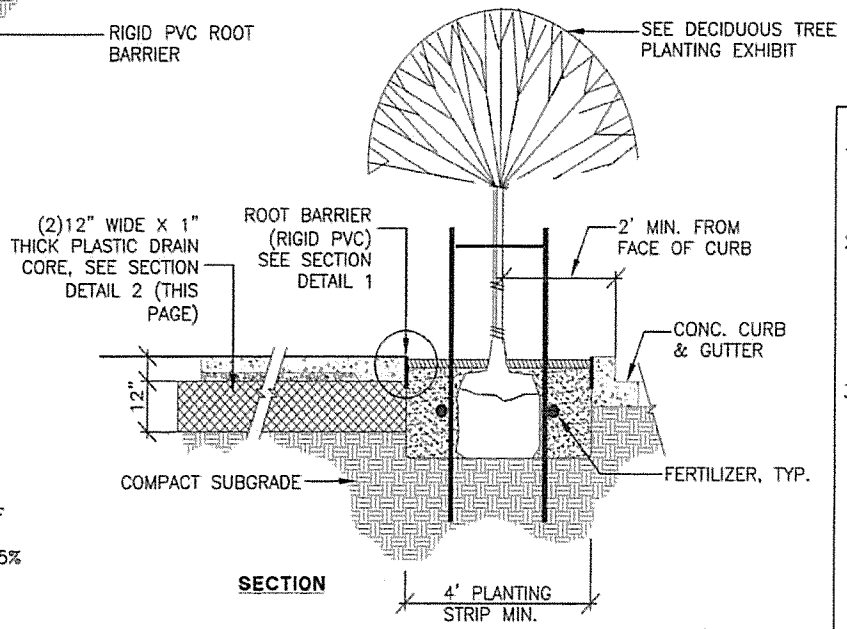

SECTION

NOTES:

1. COORDINATE TREE PLANTING & ROOT PATH TRENCH W/ INGROUND UTILITIES.
2. PROVIDE & INSTALL ROOT BARRIER ALONG SIDEWALK EDGES OF PLANTING STRIP. TOP OF ROOT BARRIER SHALL BE INSTALLED 4" BELOW TOP OF ADJACENT PAVEMENT.
3. SOILS LOCATED IN PLANTING AREAS THAT HAVE BEEN COMPACTED TO A DENSITY GREATER THAN PENETRABLE WITH A HAND SHOVEL (APPROX. 85%), SHALL BE LOOSENED TO INCREASE AERATION FOR A MINIMUM DEPTH OF 18 INCHES FOR THE ENTIRE AREA OF THE COMPACTED SOILS UTITLIZED FOR LANDSCAPE PURPOSES.

2 STREET TREE PLANTING STRIP W/ ROOT PATH TRENCH EXHIBIT

NOT TO SCALE

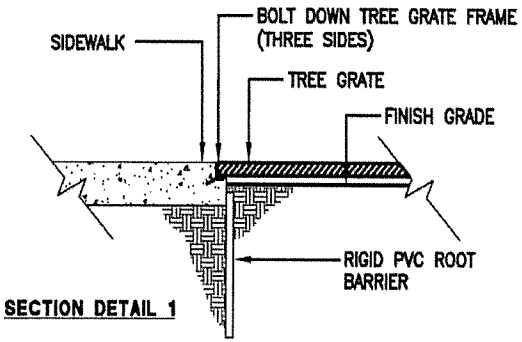

SECTION DETAIL 1

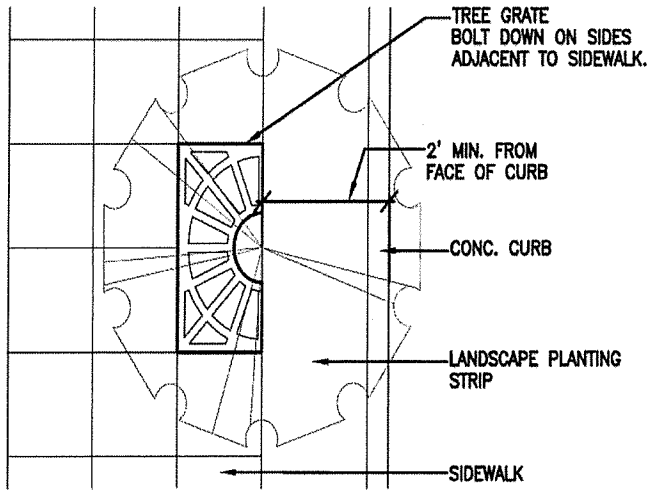

PLAN

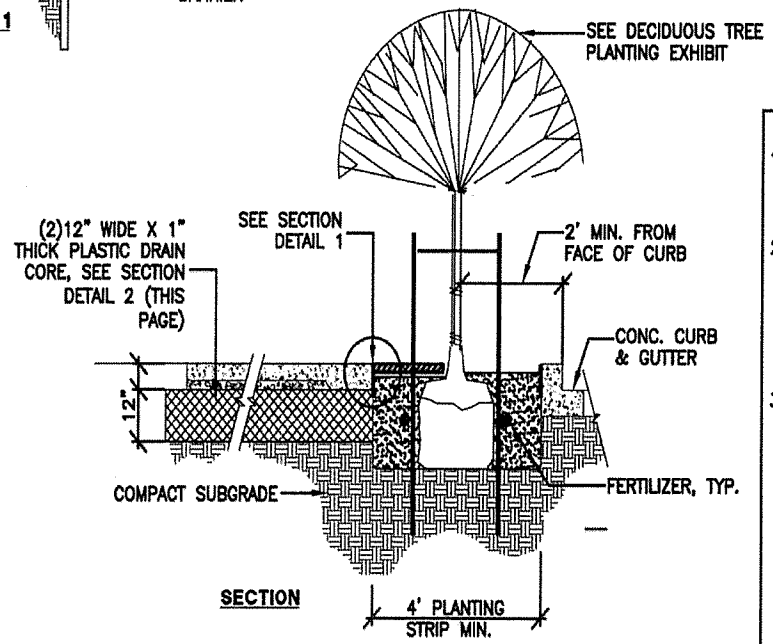

SECTION

NOTES:

1. COORDINATE TREE PLANTING & ROOT PATH TRENCH W/ INGROUND UTILITIES.
2. PROVIDE & INSTALL ROOT BARRIER ALONG SIDEWALK EDGES OF PLANTING STRIP. TOP OF ROOT BARRIER SHALL BE INSTALLED 4" BELOW TOP OF ADJACENT PAVEMENT.
3. SOILS LOCATED IN PLANTING AREAS THAT HAVE BEEN COMPACTED TO A DENSITY GREATER THAN PENETRABLE WITH A HAND SHOVEL (APPROX. 85%), SHALL BE LOOSENED TO INCREASE AERATION FOR A MINIMUM DEPTH OF 18 INCHES FOR THE ENTIRE AREA OF THE COMPACTED SOILS UTITLIZED FOR LANDSCAPE PURPOSES.

3 STREET TREE PLANTING STRIP W/ 1/2 TREE GRATE EXHIBIT

NOT TO SCALE